Tuya Smart Smart Life Bluetooth

Tuya Smart Bluetooth Fingerprint Door Lock

5 in 1 unlocking ways, Big user capacitive
Support 100 fingerprints, 75 passwords, 75 IC cards
Backlit keypad, wet finger also can touch keypad
Widely fit for wooden/iron/aluminum door, etc

ANDROID APP ON Google play

Available on the iPhone App Store

Anti-peeping Password Unlock

Semiconductor Recognition

Mechanical Key Unlock

IC Card Unlock

Mobile APP Unlock

Environment Meets IP66

Tuya Smart

Smart Life Smart Living

What is the tuya ?

Remotely control home appliances from anywhere
Add and control multiple devices at once with one App
Voice control via Amazon Echo and Google Home
Interworking of multiple smart devices.
Devices automatically start/stop working based on temperature, location and time.
Easily share devices among family members

Receive real-time alerts to ensure safety
Easily and quickly connect Tuya Smart App to devices

4 Ways to Unlock

Quick access with fingerprint
low false reconization rate
concern for elderly and kids

Fingerprint Unlock

IC Card Unlock

Password Unlock

Tuya APP Unlock

Key Unlock

Unlock Easily, Open with Touch

Semiconductor biometric fingerprint sensor
to identify rapidly with 0.5 seconds

≤0.5S
Recognition Speed

99%
Recognition Rate

Unlock easily, Open with touch,
No need to wait

Anti-Peeping False Password

Enter any number before and after the correct password, as long as the correct password is included in succession, the lock can be unlocked

156146

Virtual Password

862651

Correct Password

354965

Virtual Password

Technology is the advantage
Detail is the essence

Level C security lock core

Emergency power charging

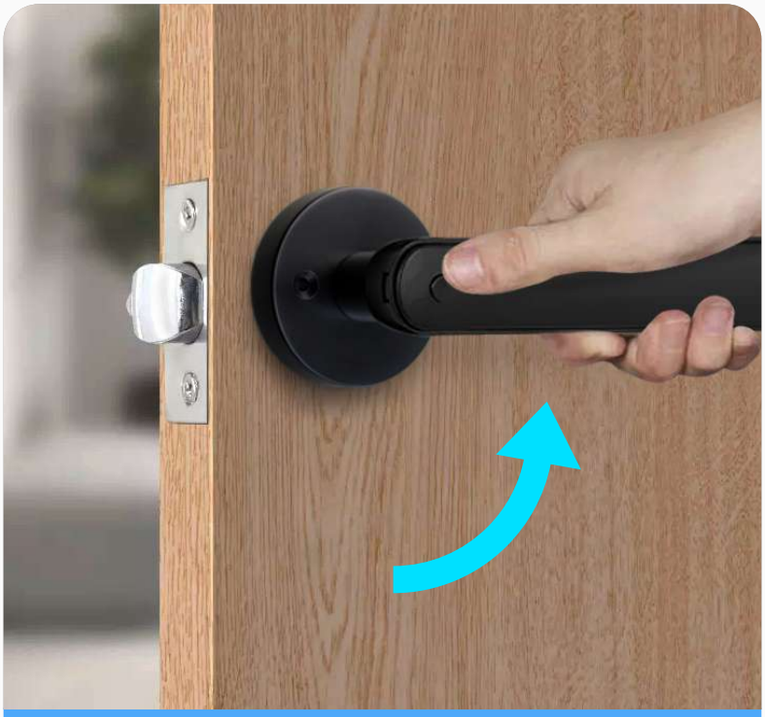

Normally open function

Waterproof IP66

Access From Anywhere
Remote Authorization Unlocking

You can authorize the unlocking authority to your family or friends in the mobile APP, even if people are far away.

Remote Control

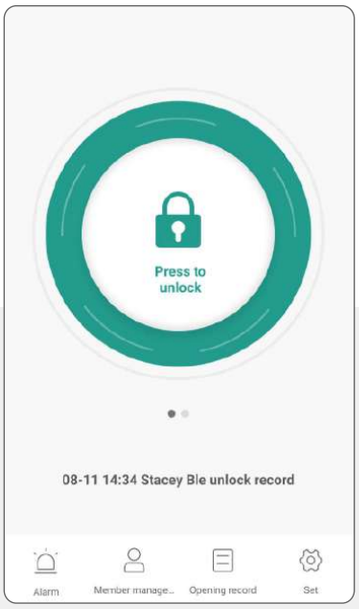

Remote unlock

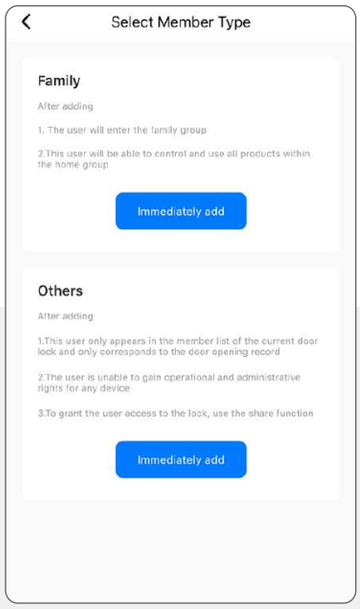

Users management

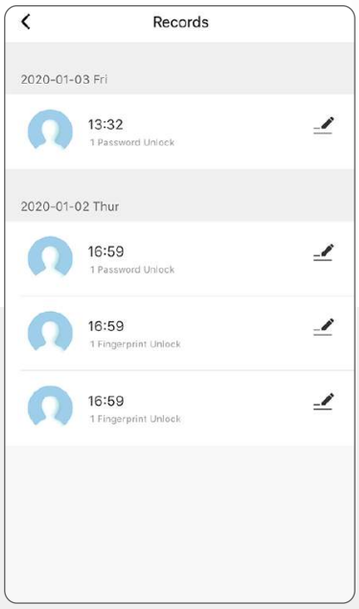

Door Record query

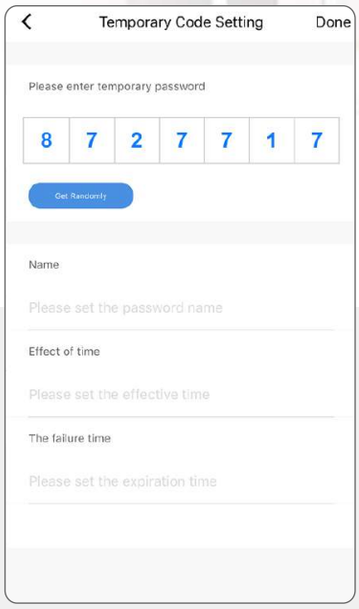

Temporary password

Product Direction Choices

Please check the opening direction of your door to choose the right product.

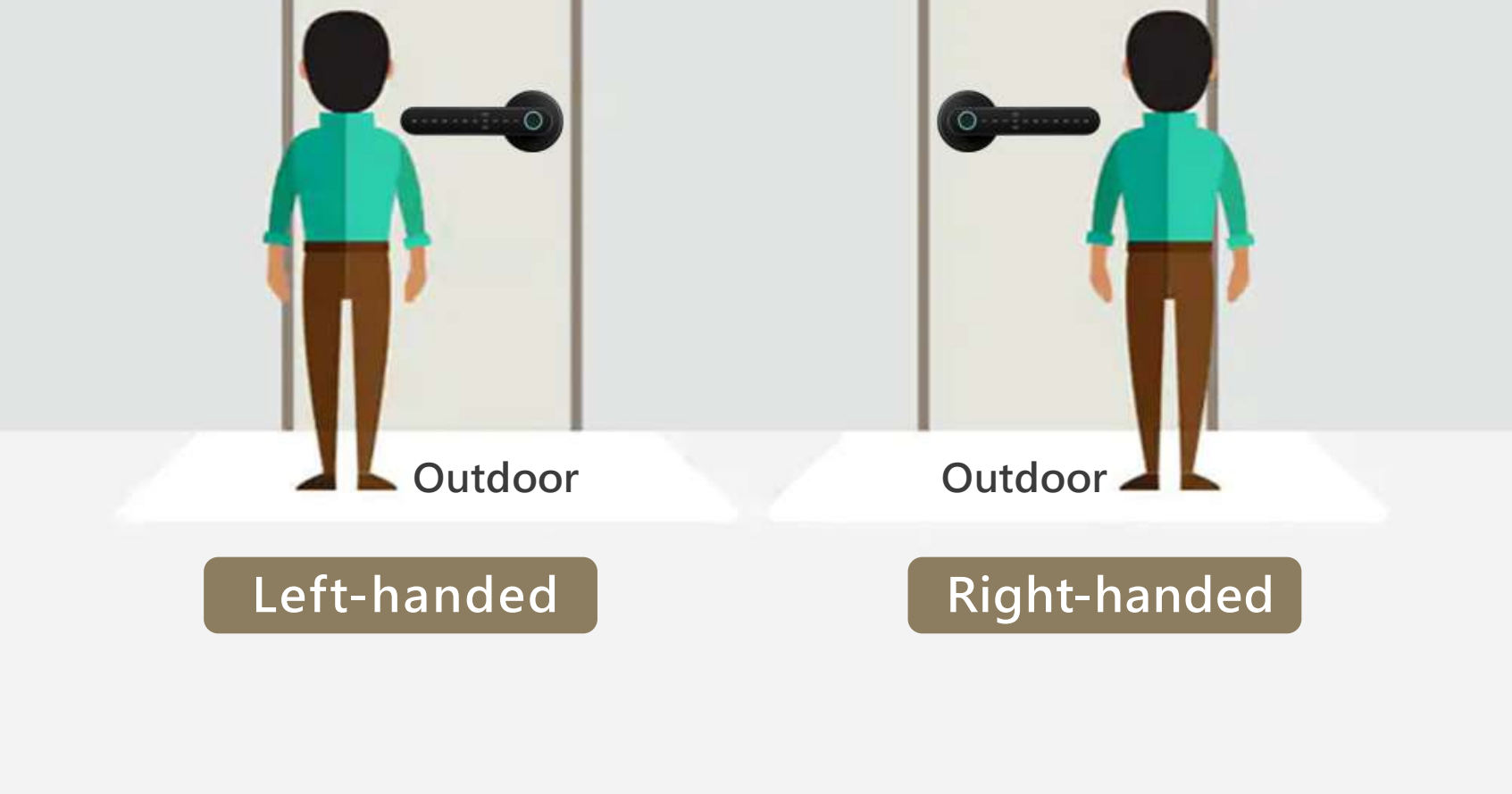

Renewal and Upgrade, Easy to Get

Replace 99% mechanical locks on the market

- **60-70 Adjustable single tongue lock body**
  (special for spherical lock)

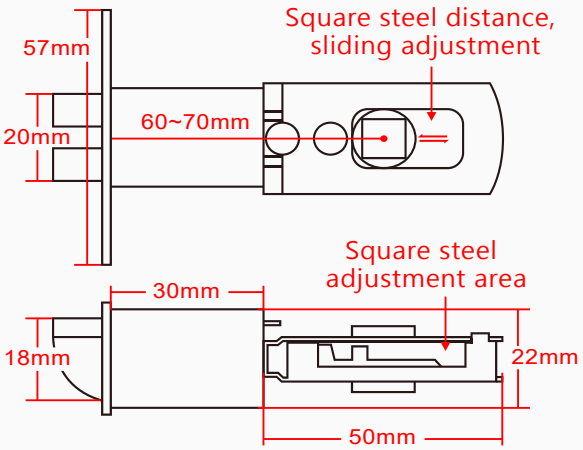

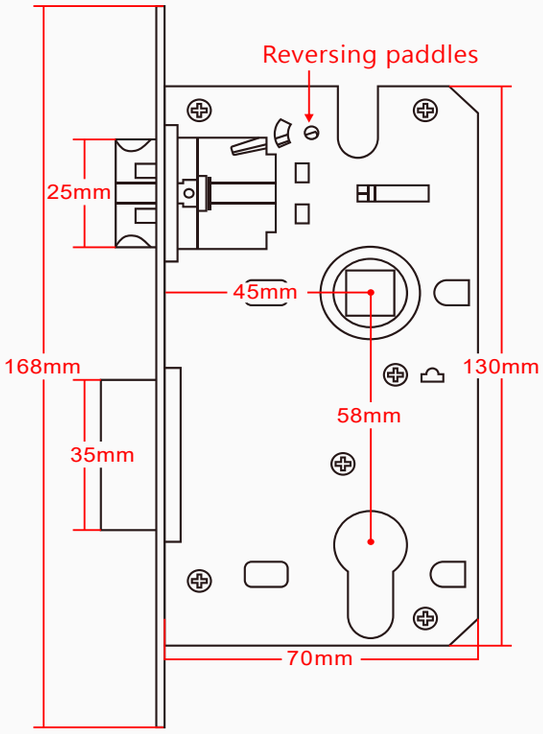

- **5845 Split lock body**
  (special for split lock)

Introduction of Product Appearance

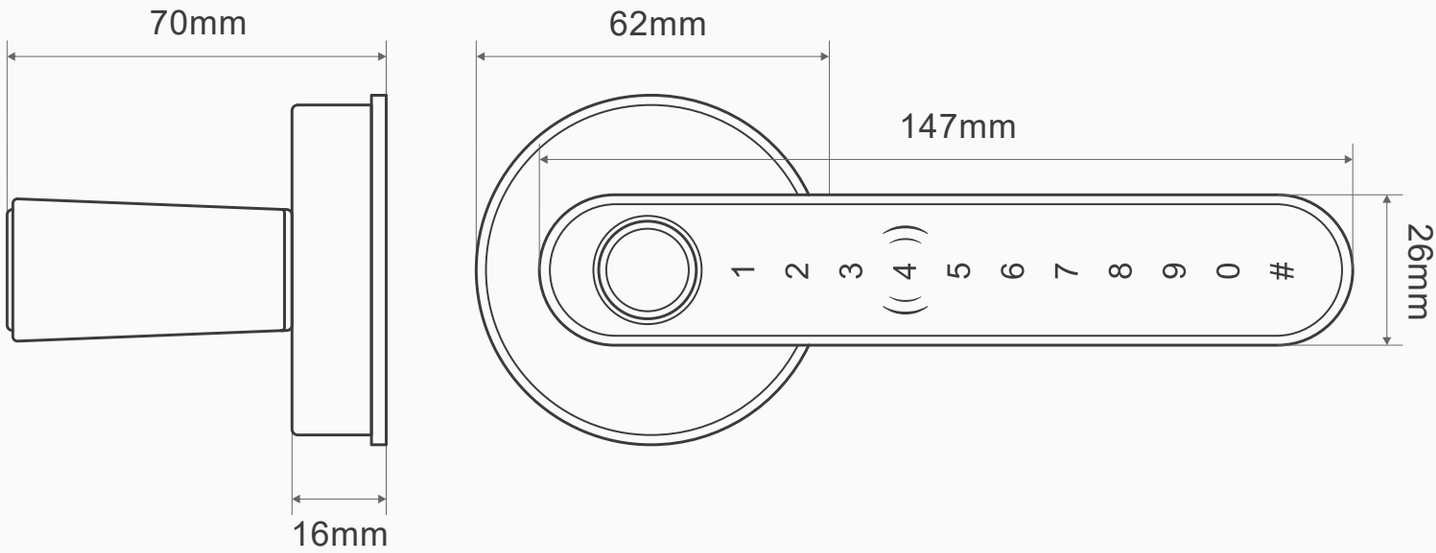

Product Description

Name	Tuya Smart Bluetooth+IC Card Fingerprint Door Lock
APP Name	TuyaSmart
Unlock By	Fingerprint, IC, Key, Password, App
Battery	4 AAA LR03 1.5V alkaline dry batteries (not included)
System Capacity	Support 100 fingerprints

Opening Method	Left and right interchange
Features	Touch screen keypad
WiFi Work	Need buy a Bluetooth Gateway (options)
Material	Zinc alloy lock body, tempered glass touch board
Box size & Unit weight	200*210*80mm, 1.25kg
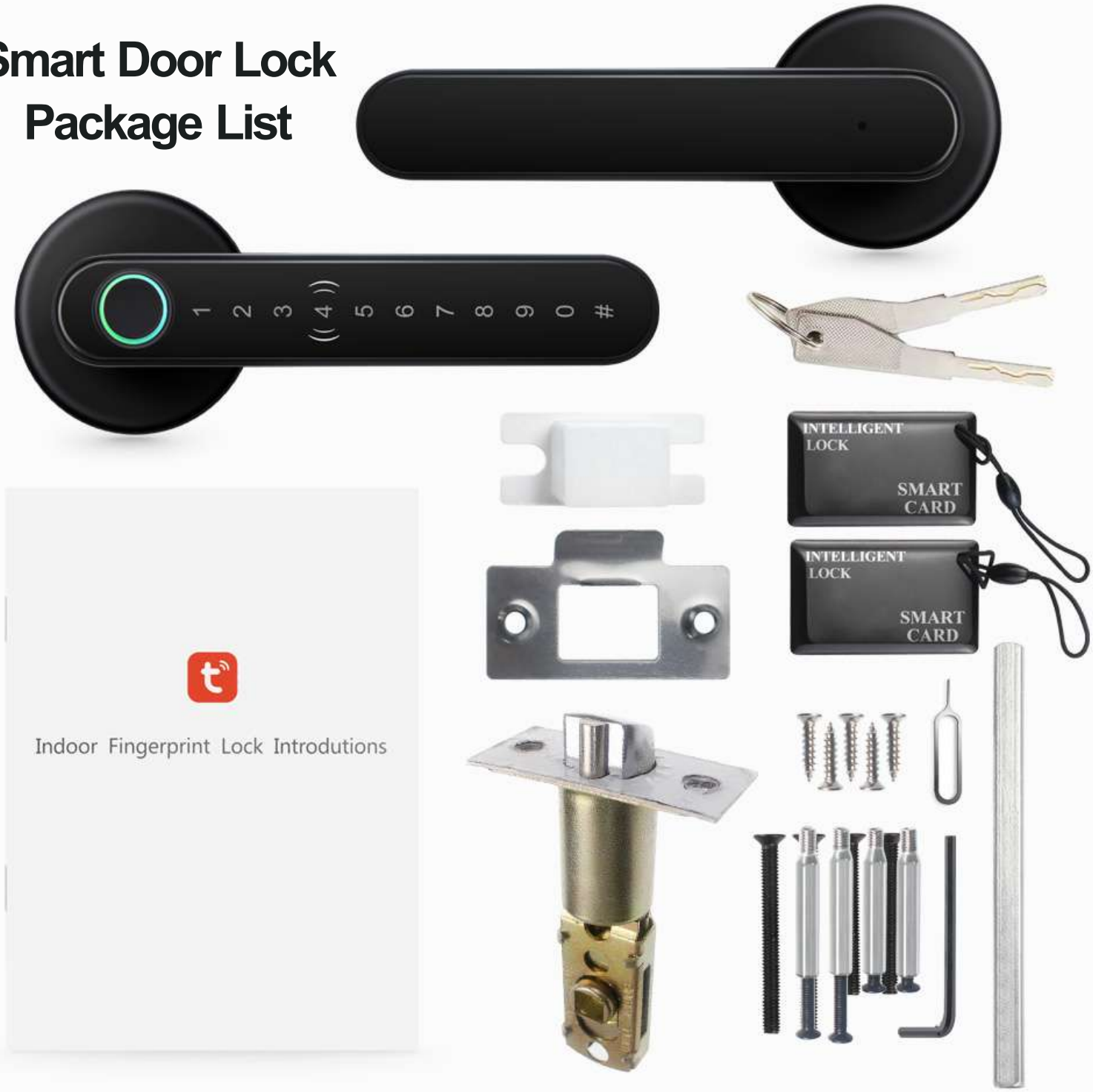
Smart Door Lock Package List