Face Recognition Access

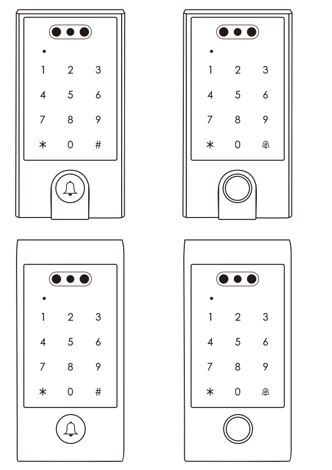

User Manual

CONTENTS

INTRODUCTION 1	INSTALLATION 3
STANDALONE MODE 5	CONTROLLER MODE 13
WIEGAND READER MODE 15	ADVANCED APPLICATION 17

INTRODUCTION

The device is a single door multifunction standalone access controller or a Wiegand output reader.
It supports multi access modes, face/fingerprint/card/PIN, the operation is very user-friendly, and low-power circuit makes it long service life.

The device can be made with Tuya WIFI version.

Features

> Touch keypad
> With camera for face recognition
> Capacitive fingerprint sensor
> Metal case,anti-vandal
> Waterproof, confoms to IP66
> PIN length: 4-6 digits
> EM+Mifare cards
> EM card: Wiegand 26-44 bits input & output
Mifare card: Wiegand 26-44, 56, 58bits input & outp
> Can be used as Wiegand reader with LED & buzzer output
> Card block enrolment
> Integrated alarm & buzzer output
> Pulse mode, Toggle mode
> User data can be transferred (except face/fingerprint users)
> 2 devices can be interlocked for 2 doors
> Built-in light dependent resistor (LDR) for anti tamper
> Backlit keypad, can be set automatic OFF after 20 seconds
> Support Authorized User

Specifications

User Cacapcity Face User Common Card/PIN User Authorized User Panic User Visitor User Fingerprint User	**5800** 300 4987 1 2 10 500 (fingerprint version only)
PIN Length	**4~6 digits**
Operating Voltage Idle Current Active Current	**12~18V DC** <80mA <250mA

Proximity Card Reader	**EM+Mifare**
Radio Technlogy Read Range	**125KHz + 13.56MHz** 1~3cm
Wiring Connections	Relay output, exit button, alarm, door contact, Wiegand input /output
Relay Adjustable Relay Output TimeLock Output Load	**One (NO, NC,Common)** 0~99 Seconds (5 seconds default) 2 Amp Maximum
Wiegand Interface PIN Output	**EM card: Wiegand 26~44 bits input & output.** **Mifare card: Wiegand 26~44bits 56bits, 58bits input & output.** (Factory default: Wiegand 26bits for EM card, Wiegand 34bits for Mifare card) **4 bits, 8 bits(ASCII), 10 digits Virtual Number** (Factory Default: 4 bits)
Environment Operating Temperature Operating Humidity	**Meets IP66** -20°C ~ 60°C (-13°F ~ 140°F) 0%RH ~ 98%RH
Physical Color Dimensions Unit Weight Shipping Weight	**Zinc-Alloy** L140 X W68 X D25 (mm) 500g 615g

Carton Inventory

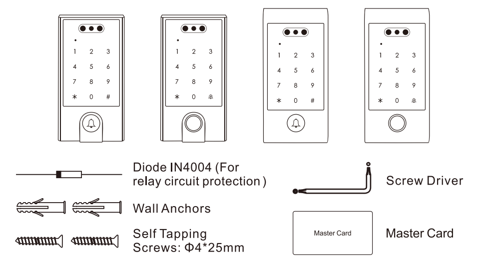

INSTALLATION

> Remove the back cover from the unit
> Drill 2 holes(A,C) on the wall for the screws and one hole for the cable
> Knock the supplied rubber bungs to the screw holes(A,C)
> Fix the back cover firmly on the wall with 4 flat head screws
> Thread the cable through the cable hole(B)
> Attach the unit to the back cover

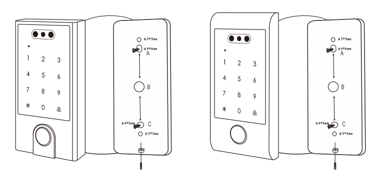

Wiring

Wire Color	Function	Notes
Basic Standalone Wiring		
Red	DC+	12~18V DC Power Input
Black	GND	Negative Pole of DC Power Input
Blue & Black	Relay NO	Normally Open Relay Output (install diode provided)
White & Black	Relay Common	Common Connection for Relay Output
Green & Black	Relay NC	Normally Closed Relay Output (Install diode provided)
Yellow	OPEN	Request to Exit(REX) Input
Pass-Through Wiring (Wiegand Reader or Controller)		
Green	Data 0	Wiegand Output (Pass-through) Data 0
White	Data 1	Wiegand Output (Pass-through) Data 1
Advanced Input and Output Features		
Grey	Alarm Output	Negative contact for Alarm
Brown	Contact Input	Door/Gate Contact Input (Normally Closed)
WIFI Version with Doorbell		
Brown & Black	Doorbell A	Contact for Doorbell
Yellow & Black	Doorbell B	Contact for Doorbell

Sound and Light Indication

Operation Status	LED	Buzzer
Stand by	Red light bright	—
Enter into programming mode	Red light shines	One beep
In the programming mode	Orange light bright	One beep
Operation error	—	Three beeps
Exit from the Programming mode	Red light shines	One beep
Open lock	Green light bright	One beep
Alarm	Red light Shines quickly	Beeps

Basic Configure

Enter and Exit Program Mode

Programming Step	Keystroke Combination
Enter Program Mode	* (Master Code) # (Factory default is 123456)
Exit Program Mode	*

Set Master Code

Programming Step	Keystroke Combination
1. Enter Program Mode	* (Master Code) #
2. Update Master Code	0 0 # (New Master Code) # (Repeat New Master Code) # (Master code is any 6 digits)
3. Exit Program Mode	*

Set the Working Mode

Notes: The device has 3 working modes: Standalone Mode, Controller Mode, Wiegand Reader Mode, choose the mode you use. (Factory default is Standalone Mode / Controller Mode)

Programming Step	Keystroke Combination
1. Enter Program Mode	* (Master Code) #
2. Standalone/Controller Mode **OR** 2. Wiegand Reader Mode	7 4 # 0 # (factory default) 7 4 # 1 #
3. Exit	*

STANDALONE MODE

The device can work as Standalone Access Control for single door.
(Factory default mode) — 7 4 # 0 #

Connection Diagram
Common Power Supply

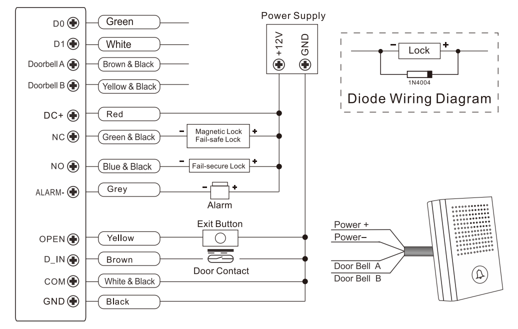

Attention:
Install a 1N4004 or equivalent diode is needed when use a common power supply, or the keypad might be damaged. (1N4004 is included in the packing)

Access Control Power Supply

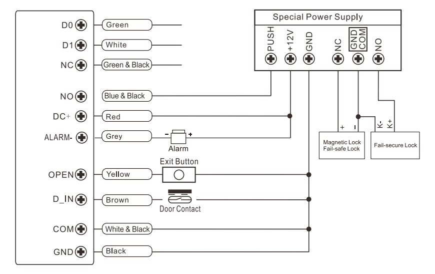

Programming

Programming will be vary depending on access configuration. Follow the instructions according to your access configuration.

Notes:

> User ID number: Assign a user ID to the access Face /Card /PIN / Fingerprint in order to track it.

> User ID number:

-The Common Card/PIN user ID: 1-4987
Authorized User ID: 4988
Panic User ID: 4989~4990
Visitor User ID: 4991-5000
-Face user ID: 5001-5300
-Fingerprint User ID: 6001-6499 (Fingerprint version only)
Master Fingerprint ID: 6500

IMPORTANT: User IDs do not have to be proceeded with any leading zeros. Recording of User ID is critical. Modifications to the user require the User ID be available.

> Proximity Card:
Proximity Card: EM+Mifare cards

> PIN: Can be any 4~6 digits.

Add Common Users

When adding users directly, the ID number will be automatically searched and increased from small to large.
Card/PIN user ID: 1-4987, PIN length: 4~6 digits; Face ID: 5001-5300
Fingerprint User ID: 6001-6499 (Fingerprint Version only)

Programming Step	Keystroke Combination
1. Enter Program Mode	* (Master Code) #
Add Card User	
2. Using Auto ID (Allows the device to assign Card to next available User ID number) **OR** 2. Select Specific ID (Allows Master to define a specific User ID to associate the card to) **OR** 2. Add Card: Block Enrollment (Allow Master to add up to 500 cards each time to the reader in a single step. Green LED on along with a beep means done successfully)	**10 # (Read Card) / (Input 8/10/17 Digits Card Number) #** The cards can be added continuously. **10 # (User ID) # (Read Card) / (Input 8/10/17 Digits Card Number) #** **10 # (User ID) # (Card Quantity) # (Read Card) / (The First Card 8/10/17 Digits Number) #** Cards' number must be consecutive; Card quantity = number of cards to be enrolled.
Add PIN User	
2. Select Specific ID (Allows manager to define a specific User ID to associate the PIN to)	**10 # (User ID) # (PIN) #**
Add Face User	
2. Using Auto ID (Allows the device to assign Face to next available User ID number) **OR** 2. Select Specific ID (Allows the device to assign Face to next available User ID number)	**11 # (Record Face)... #** The faces can be added continuously. **10 # (User ID) # (Record Face) #**
Add Fingerprint User	
2. Using Auto ID (Allows the device to assign Fingerprint to next available User ID number) **OR**	**10 # (Fingerprint) (Repeat Fingerprint) (Repeat Fingerprint again)** Fingerprints can be added continuously.

2. Select Specified ID (Allows Master to define a specific User ID to associate the fingerprint to)	**10 # (User ID) # (Fingerprint) (Repeat Fingerprint) (Repeat Fingerprint again)** Fingerprints can be added continuously.
3. Exit	*

Tips for PIN Security (Only valid for 6 digits PIN):
For higher security we allow you to hide your correct PIN with other numbers up to a max of 9 digits.

Example PIN: 123434
You could use **(123434) * or ** (123434)
("*" can be any numbers from 0~9)

Add Master Fingerprint (By Specified ID: 6500) (Fingerprint Version only)

Programming Step	Keystroke Combination
1. Enter Program Mode	* (Master Code) #
1. Add Master Fingerprint	**10 # (6500) # (Fingerprint) (Repeat Fingerprint) (Repeat Fingerprint again)**
3. Exit	*

Add Authorized User

(User ID number is 4988; PIN length: 4~6 digits)

Programming Step	Keystroke Combination
1. Enter Program Mode	*(Master Code) #
2. Add Card **OR** 2. Add PIN	**10 # (4988) # (Read Card /input 8/10 Digits Card number) #** **(4988) # (PIN) #**
3. Exit	*

Remark:
Authorized user can be card or PIN, read the Authorized Card or input Authorized PIN. then all valid users can't access; read the Authorized Card or input Authorized PIN again, then all valid users can access again.

Add Panic Users (Valid for Card/ PIN Users)

(User ID number is 4989,4990 PIN length: 4~6 digits)

Programming Step	Keystroke Combination
1. Enter Program Mode	* (Master Code) #
2. Add Card **OR** 2. Add PIN	**10 # (User ID) # (Read Card / Input 8/10/17 Digits Card number) #** **10 # (User ID) # (PIN) #**
3. Exit	*

Add Visitor Users (Valid for Card/ PIN Users)

(User ID number is 4991-5000, PIN length: 4~6 digits)
There are 10 groups Visitor PIN/card available, the users can be specified up to 10 times of usage, after a certain number of times, i.e. 5 times, the PIN/card become invalid automatically.

Programming Step	Keystroke Combination
1. Enter Program Mode	*(Master Code) #
2. Add Card **OR** 2. Add PIN	**10 # (User ID) # (0~9) # (Read Card) / (Input 8/10/17 Digits Card Number) #** **10 # (User ID) # (0~9) # (PIN) #** (0~9 means times of usage, 0=10 times)
3. Exit	*

Delete Users

Programming Step	Keystroke Combination
1. Enter Program Mode	* (Master Code) #
2. Delete User- By Fingerprint/ Card **OR** 2. Delete User - By ID number **OR** 2. Delete User - By Card number **OR** 2. Delete User- By Face **OR** 2. Delete ALL Users **OR** 2. Delete ALL Card/PIN Users **OR** 2. Delete ALL Face Users **OR** 2. Delete ALL Fingerprint Users	**2 0 #(Input Fingerprint)/ (Read Card) #** The users can be deleted continuously. **2 0 # (User ID) #** **2 0 # (input 8/10/17 Digits Card Number) #** **2 1 # (Record Face) #** **2 0 # (Master Code) #** **2 0 # 1 (Master Code) #** **2 0 # 2 (Master Code) #** **2 0 # 3 (Master Code) #**
3. Exit	*

Simplified Instruction	
Function Description	**Operation**
Enter the Programming Mode	* - Master Code - # then you can do the programming (123456 is the factory default master code)
Change the Master Code	00-#-New Code-#-Repeat New Code-# (code: 6 digits)
Add Card User	10-#-Read Card-# (can add cards continuously)
Add Fingerprint User	10-#-Fingerprint- Repeat Fingerprint Repeat Fingerprint Again- #
Add PIN User	10-#-(User ID)-#-PIN-# (The PIN is any 4~6 digits)
Add Face User	11-#-Record Face-#
Delete User	20-#-Read Card-# 20-#-User ID-# 20-#-Fingerprint-# 21-#-Face-#
Exit from the Programming Mode	*
How to release the door	
Face User	Present Face
Fingerprint User	Input Fingerprint
Card User	Read Card
PIN User	Input PIN #

20241108_V1

Set Relay Configuration

The relay configuration sets the behaviour of the output relay on activation.

Programming Step	Keystroke Combination
1. Enter Program Mode	*(Master Code) #
2. Pulse Mode **OR** 2. Toggle Mode	**3 0 # (1~99) #** (factory default) The relay time is 1-99 seconds. (Default is 5 seconds) **3 0 # 0 #** Sets the relay to ON/OFF Toggle mode
3. Exit	*

Set Access Mode

For Multi user access mode, the interval time of reading can not exceed 5 seconds, or else, the device will exit to standby automatically.

Programming Step	Keystroke Combination
1. Enter Program Mode	*(Master Code) #
2. Card Access **OR** 2. PIN Access **OR** 2. Face Access **OR** 2. Fingerprint Access **OR** 2. Card/PIN/Face/Fingerprint Access **OR** 2. Multi User Access	**4 0 # 0 #** **4 0 # 1 #** **4 0 # 2 #** **4 0 # 3 #** **4 0 # 4 #** (factory default) **4 1 # (2~9) #** (Only after 2~9 valid users, the door be opened)
3. Exit	*

Under Multi User Access, needs to use command **0 #** to wake up for face recognition

Set Face Recognition

Programming Step	Keystroke Combination
1. Enter Program Mode	*(Master Code) #
2. Face Record Way **OR**	**5 0 # (0/1) #** 0 = Record front face only (factory default) 1 = Record face by multiple angles

2. Record Repeatly or not **OR** 2.Sensing Distance	**5 1 # (0/1) #** 0 = Same face can't be recorded repeatly (factory default) 1 = Same face can be recorded repeatly (will occupy extra User ID) **5 2 # (0/1/2) #** Larger value = farther distance (factory default: 2)
3. Exit	*

Set Strike-out Alarm

The strike-out alarm will engage after 10 failed entry attempts (Factory is OFF).
It can be set to deny access for 10 minutes after engaging or disengage only after entering a valid Fingerprint/Card/ PIN/ Face or Master Code/Fingerprint/Card.

Programming Step	Keystroke Combination
1. Enter Program Mode	* (Master Code) #
2. Strike-Out OFF **OR** 2. Strike-Out ON **OR** 2. Strike-Out ON (Alarm) **Set Alarm Time**	**6 0 # 0 #** (factory default) **6 0 # 1 #** Access will be denied for 10 minutes (Exit button is still workable) **6 0 # 2 #** **3 1 # (0-3) #** (factory default is 1 minute) Enter Master Code # or Master Fingerprint / Card or valid user fingerprint / card / PIN to silence
3. Exit	*

Set Door Open Detection

Door Open Too Long (DOTL) Detection
When use with an optional magnetic contact or built-in magnetic contact of the lock, if the door is opened normally, but not closed after 1 minute, the inside buzzer will beep automatically to remind people to close the door. The beep can be stopped by closing the door, master users or valid users, or else, it will continue to beep the same time with the alarm time set.

Door Forced Open Detection
When use with an optional magnetic contact or built-in magnetic contact of the lock, if the door is opened by force, the inside buzzer and external alarm (if there is) will both operate, they can be stopped by master users or valid users, or else, it will continue to sound the same time with the alarm time set.

Programming Step	Keystroke Combination
1. Enter Program Mode	* (Master Code) #
2. Disable Door Open Detection **OR** 2. Enable Door Open Detection **Set Alarm Time**	**6 1 # 0 #** (factory default) **6 1 # 1 #** **3 1 # (0-3) #** (factory default is 1 minute)
3. Exit	*

The function of **Set Alarm Time** also apply for anti-tamper alarm

Set Audible and Visual Response

Programming Step	Keystroke Combination
1. Enter Program Mode	* (Master Code) #
2. Mute Low Sound Medium Sound High Sound **OR** 2. LED Always OFF LED Always ON **OR** 2. Keypad Backlit Always OFF Keypad Backlit Always ON Keypad Backlit Automatic OFF	**7 0 # 0 #** **7 0 # 1 #** **7 0 # 2 #** **7 0 # 3 #** (factory default) **7 1 # 0 #** **7 1 # 1 #** (factory default) **7 2 # 0 #** **7 2 # 1 #** **7 2 # 2 #** (factory default) Automatic OFF after 20 seconds, it will go ON by pressing any key (this key isn't taken into consideration)
3. Exit	*

Master Fingerprint/ Card Usage
(face user can't be added/deleted by this way)

Using Master Fingerprint/ Card to add and delete users	
Add Fingerprint/ Card/ PIN Users	1. Input **(Master Fingerprint / Card)** 2. Input **(Fingerprint three times)** or **(Card)** or **(User ID#PIN#)** Repeat step 2 for additional users 3. Input **(Master Fingerprint / Card)** again

Delete Fingerprint/ Card/ PIN Users	1. Input **(Master Fingerprint/ Card Twice within 5s)** 2. Input **(Fingerprint)** or **(Card)** or **(User ID#)** Repeat step 2 for additional users 3. Input **(Master Fingerprint/ Card)** again

Users Operation & Reset to Factory Default

> Open the door: Read valid user fingerprint or user card or input valid user PIN #

> Remove Alarm: Enter Master Code # or Master Fingerprint/ Card or valid user fingerprint / card / PIN
(for Master Card or User Card, only Mifare card is workable)

> To reset to factory default & Add Master Card: Power off, press the Exit Button, hold it and power on, there will be two beeps, then release the exit button, the LED light turns into yellow, then read any 125KHz EM card/ 13.56MHz Mifare card, the LED will turn into red, means reset to factory default successfully. Of the card reading, it is the Master Card.

Remarks:
① If no Master Card added, must press the Exit Button for at least 5 seconds before release.(this will make the previous registered Master Card invalid)
② Reset to factory default, the user's information is still retained.

CONTROLLER MODE

The device can work as Controller, connected with the external Wiegand reader.
(Factory default mode) --- 7 4 # 0 #

Connection Diagram

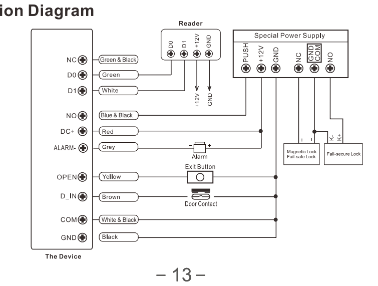

Attention: Install a 1N4004 or equivalent diode is needed when use a common power supply, or the reader might be damaged. (1N4004 is included in the packing)

Set Wiegand Input Formats

Please set the Wiegand input formats according to the Wiegand output format of the external Reader.

Programming Step	Keystroke Combination
1. Enter Program Mode	* (Master Code) #
2. Wiegand Input Bit	**For EM Card: 8 2 # (26~44) #** (factory default is 26bits) **For Mifare Card: 8 3 # (26~44,56,58) #** (factory default is 34bits)
3. Disable Parity Bit Enable Parity Bit	**8 0 # 0 #** **8 0 # 1 #** (factory default)
4. Exit	*

Note: For connecting Wiegand readers with 32, 40, 56 bits output, need disable parity bits.

Programming

> Basic Programming is the same as Standalone Mode
> There are some exceptions for your attention:
The device Connected with External Card Reader
- If EM/Mifare card reader: users can be added/deleted on either the device or external reader.
- If HID card reader : users can only be added/deleted on extemal reader.

The device Connected with Fingerprint Reader
For example:
Connect SF1 as the fingerprint reader to the device.
Step 1: Add the Fingerprint (A) on SF1 (Please refer to SF1 manual)
Step 2: Add the same Fingerprint(A) on the device:

1	Enter Program Mode: * **(Master Code) #**
2 **OR** 2	**1 (Press Fingerprint A once on SF1) #** (ID auto allocated) **1 (User ID) # (Press Fingerprint A on SF1) #** (Select specific ID)
3	Exit: *

The device Connected with Keypad Reader
The keypad reader can be 4 Bits, 8 Bits (ASCII), or 10 Bits output format.
Choose the below operation according to the PIN output format of your reader.

Programming Step	Keystroke Combination
1. Enter Program Mode	* (Master Code) #
2. PIN input bits	**8 1 # (4 or 8 or 10) #** (factory default is 4 bits)
3. Exit	*

Remarks: 4 means 4 bits, 8 means 8 bits, 10 means 10 digits virtual number.

> Add PIN Users:
To add PIN users, after enter into programming mode on the device, PIN(s) can be input/ added on either the device or the external Keypad Reader.

> Delete PIN Users: the same way as add users.

WIEGAND READER MODE

The device can work as Standard Wiegand Reader, connected to the third party Controller --- 7 4 # 1 #

Connection Diagram

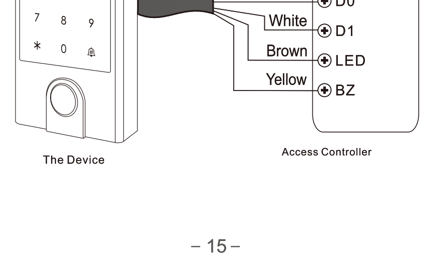

Notes:
> When set into Wiegand Reader mode, nearly all settings in Controller Mode will become invalid, and Brown & Yellow wires will be redefined as below:
- Brown wire: Green LED light control
- Yellow wire: Buzzer control

> If you need to connect Brown/Yellow wires:
When the input voltage for LED is low, the LED will turn into Green; and when the input voltage for Buzzer is low, it will sound.

Set Wiegand Output Formats

Please set the Wiegand output formats of Reader according to the Wiegand input formats of the Controller.

Programming Step	Keystroke Combination
1. Enter Program Mode	* (Master Code) #
2. Wiegand Output PIN Output	**For EM Card: 8 2 # (26~44) #** (factory default is 26bits) **For Mifare Card: 8 3 # (26~44,56,58) #** (factory default is 34bits) **8 1 # (4 or 8 or 10) #** (factory default is 4 bits)
3. Disable Parity Bit Enable Parity Bit	**8 0 # 0 #** **8 0 # 1 #** (factory default)
4. Exit	

Note: For connecting Wiegand controller with 32, 40, 56 bits input, need disable parity bits.

ADVANCED APPLICATION

Interlock
The device supports the Interlock Function. It is of two Devices for two doors, and mainly used for banks, prisons, and other places where a higher level security is required.

Connection Diagram:

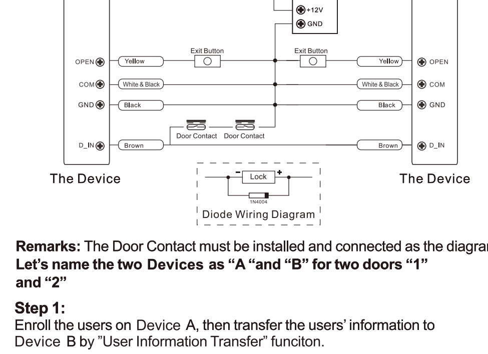

Remarks: The Door Contact must be installed and connected as the diagram.
Let's name the two Devices as "A "and "B" for two doors "1" and "2"

Step 1:
Enroll the users on Device A, then transfer the users' information to Device B by "User Information Transfer" funciton.

Step 2:
Set both of the two Devices (A and B) to Interlock function

Programming Step	Keystroke Combination
1. Enter Program Mode	* (Master Code) #
2. Disable Interlock **OR** 2. Enable Interlock	**9 0 # 0 #** (factory default) **9 0 # 1 #**
3. Exit	*

If enable interlock, when and only door 2 is closed, the user can read the valid fingerprint/card or input PIN on Reader A, door 1 will open; then when and only door 1 closed,read valid fingerprint/card or input PIN on Reader B, door 2 will open.

Collection Card Mode

After this mode is turned on, all cards can open the lock. At the same time, the card is added to the device.

Programming Step	Keystroke Combination
1. Enter Program Mode	* (Master Code) #
2. Collection Card Mode OFF **OR** 2. Collection Card Mode ON	**9 1 # 0 #** (factory default) **9 1 # 1 #**
3. Exit	*

User Information Transfer (Valid for Card / PIN Users)

The device supports the User Information Transfer function, and the enrolled user (cards, PINs) can be transferred from one (let's name it Master Unit) to another (let's name it Accept Unit).

Connection Diagram:

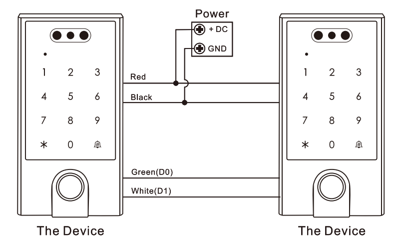

Remarks:
> The Master units and Accept units must be same series devices.
> The Master Code of the Master Unit and the Accept Unit must be set to the same.
> Program the transfer operation on Master Unit only.
> If the Accept Unit is already with the users enrolled, it will be covered after transferring.
> For full users enrolled, the transfer takes about 30 seconds.

Set Transferring on Master Unit:

Programming Step	Keystroke Combination
1. Enter the programming mode	* (Master Code) #
2. Set transferring	9 8 # 1 #
Within 30 seconds, Green LED shines, after one beep, the LED will turn into Red, which means the users' information has been transferred successfully.	
3. Exit	*

App Features (Tuya version Only)

The device can be integrated with TUYA WIFI to manage the device in the Tuya Smart/Smart life App. On the device, how to turn off the alarm prompts on the app and unbind the WiFi for your reference

Programming Step	Keystroke Combination
1. Enter Program Mode	*(Master Code) #
App Alarm Notification	
2. Disable **OR** 2. Enable	**9 2 # 0 #** **9 2 # 1 # (factory default)**
Reset the WIFI	
2. Reset the WIFI	**9 9 # (Master Code) #**
3. Exit	*