User Manual MINI-ZB1GP (EN)

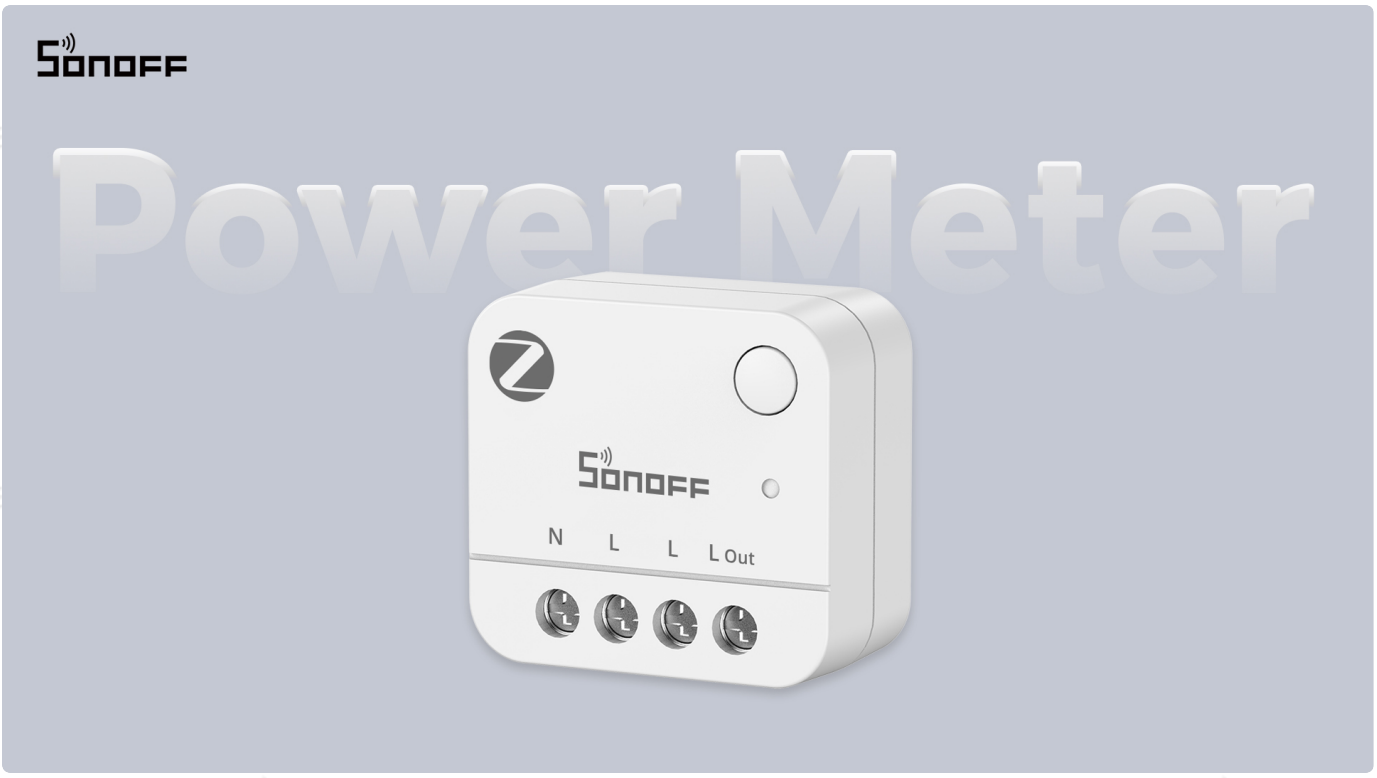

Zigbee Power Meter

User Manual V1.0

Product Introduction

The MINI-ZB1GP is a compact Zigbee smart energy meter (requires neutral wire connection) that monitors real-time power consumption and calculates electricity costs. It supports a maximum load of 16A, ensuring electrical safety. It also supports on-demand export of power data and allows smart scene configuration, creating a more reliable home power usage environment.

Remote Monitoring

Repeater Function

More Compact

Energy Monitoring

ITEAD - 黎业军(2602432)

Smart Scene

Supports loads up to 16A

One Year of Historical Data

Zigbee3.0

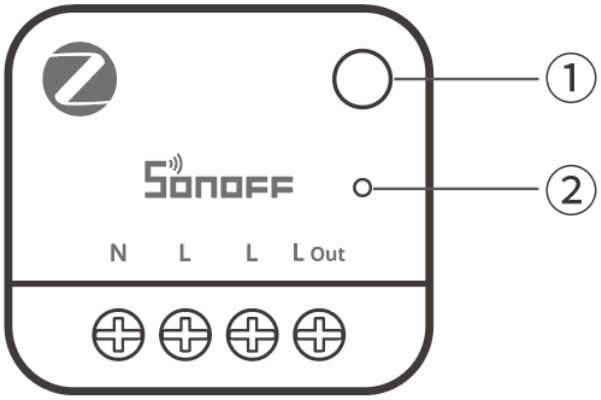

① Button

- Press and hold for 5 seconds: Device enters pairing mode (Zigbee pairing + Bluetooth pairing, pairing lasts for 3 minutes).
- Short-press once, then press and hold for 5 seconds within 3 seconds: Activates Bluetooth pairing mode (only effective after pairing with a Zigbee gateway).
- Press and hold for 10 seconds: Factory reset.

② LED Indicator (Blue)

- Slow flashing for 180 seconds: First power-on, entering pairing state (Zigbee pairing + Bluetooth pairing).
- Steady off: Pairing failed/timed out.
- Steady on: Connected to the gateway normally.
- Fast flashing: Abnormal connection to the gateway.
- Two fast flashes followed by one slow flash: Bluetooth pairing mode active.

Specification

MINI PM（Zigbee Version）	
Product Series	MINI Extreme Series Gen5
Product Name	Zigbee Power Meter

ITEAD - 黎业军(2602432)

Product Model	MINI-ZB1GP
MCU	EFR32MG21
Rating	100-240V~ 50/60Hz 16A
Zigbee	IEEE 802.15.4
Net Weight	14g
Dimensions	32x29x15.9mm
Color	White
Housing Material	PC
Recommended Wire Gauge	18 AWG to 14 AWG (0.75mm^2 to 2.5mm^2) SOL/STR copper conductor only
Installation Location	Indoor concealed installation
Operating Temperature	-10℃~ 40℃
Operating Humidity	10%~90% RH, non-condensing
Voltage Measurement Range	110-240V
Current Measurement Range	0-16A
Power Measurement Range	0-3840W
Pollution Degree	II
Operating Altitude	2000M
Maintenance	Temperature: MINI-ZB1GP operating temperature is -10°C~40°C. Exceeding this temperature range will cause damage to the meter. Please note that it can influence the meter's life negatively if the meter operates in extremely high or extremely low temperatures. MINI-ZB1GP storage temperature range is -30~70°C.
FCC ID	2APN5-MINIZB1GP
Certifications	CE / RoHS / FCC

ITEAD - 黎业军(2602...

Installation

1. Power Off

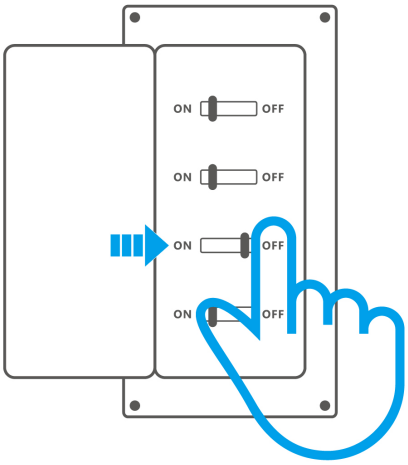

Warnings:

① Installation and troubleshooting must be performed by a qualified electrician. Do not perform wiring or touch terminals while the device is powered on to avoid electric shock!

② To ensure safe electrical installation, a miniature circuit breaker (MCB) or residual current operated circuit breaker (RCBO) rated at 16A and compliant with national safety standards must be installed ahead of the MINI-ZB1GP.

③ For single-phase use only (100-240V~). Connecting to a multi-phase power supply may damage the device.

2. Wiring Instruction

ITEAD - 黎业军(2602432)

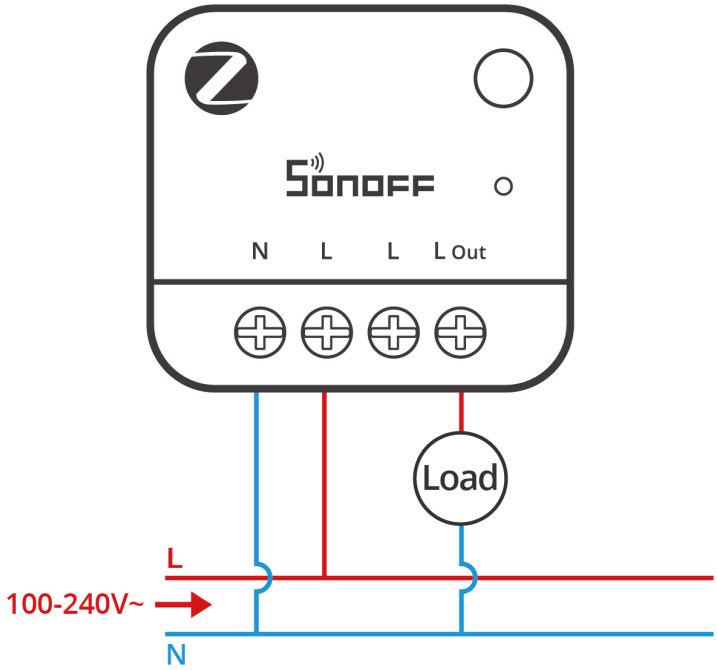

Terminal		Wires	
N	Neutral wire	N	Neutral wire
L	Live wire	L	Live wire (100–240V~)
L	Live wire	L	Live wire (100–240V~)
L Out	Live wire output terminal		

ⓘ Ensure wiring is correct.

3. Power On

ITEAD - 黎业军(2602432)

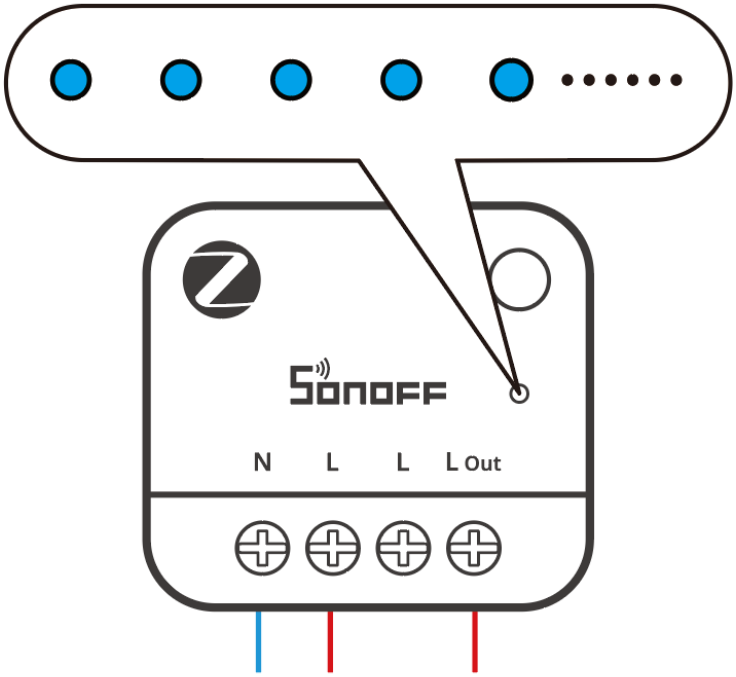

After power-on, the device enters pairing mode by default for first-time use, with the LED slowly flashing.

ⓘ If no pairing is performed within 3 minutes, the device exits pairing mode. To re-enter pairing mode, press and hold the button for 5 seconds until the LED slowly flashes.

Download the eWeLink App

Please download the "**eWeLink**" App from the **Google Play Store** or **Apple App Store**.

Add a SONOFF Zigbee Gateway

Compatible Gateways:

ITEAD - 黎业军(2602432)

Recommended SONOFF gateway models: ZBBridge-P, ZBBridge-U, NSPanel Pro, iHost
Other compatible SONOFF gateway models: ZBDongle-P, ZBDongle-E

Add Device

Method 1: Scan QR Code

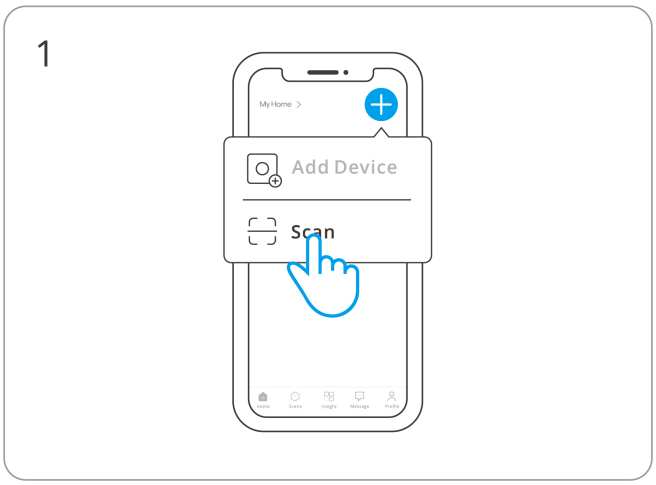

Open "Scan" in the app

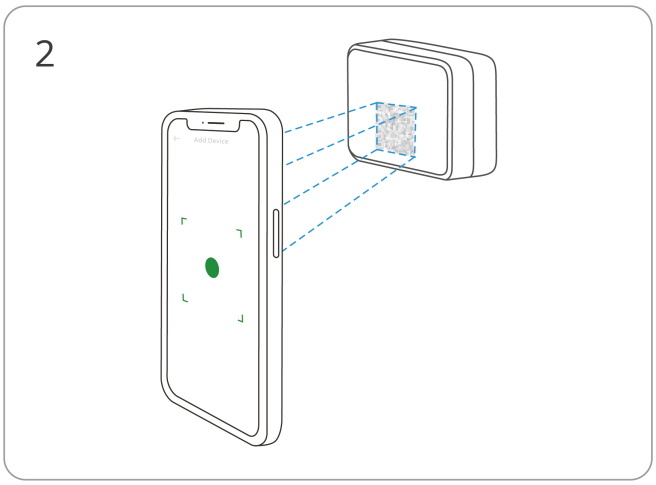

Scan the QR code on the device

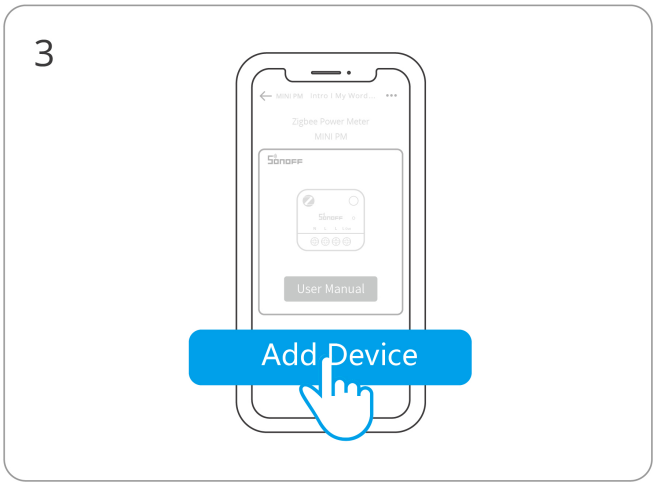

Select "Add Device"

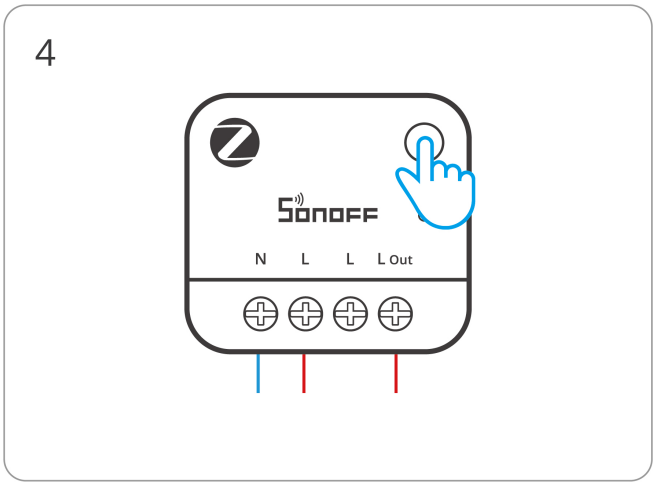

(If device exits pairing mode) Press and hold the button for 5 seconds

ITEAD - 黎业军(2602432)

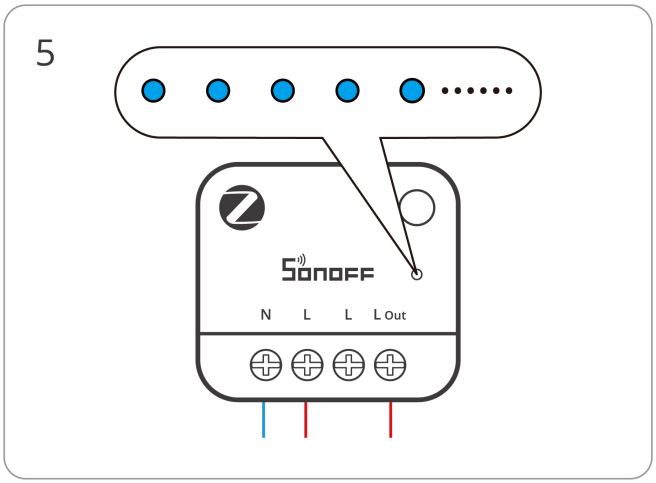

Check that the LED is slowly flashing

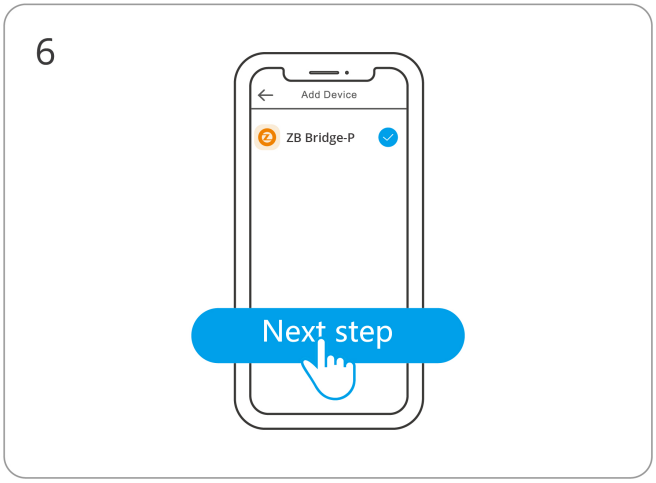

Select the Zigbee gateway

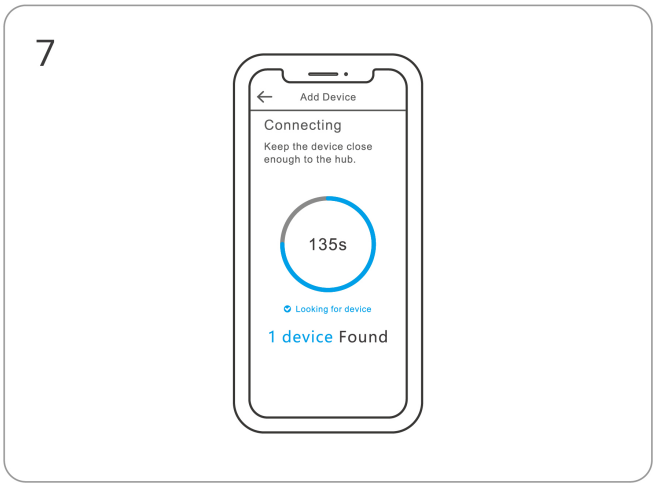

Add device and select "Finish"

Method 2: Activate Gateway Pairing Mode

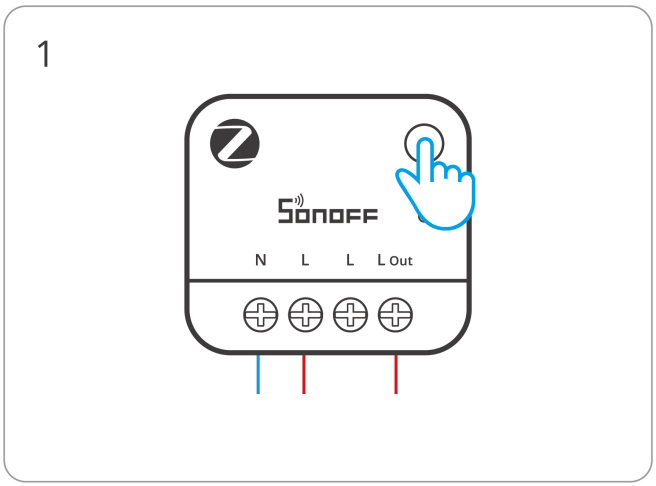

Press and hold the button for 5 seconds to confirm the device enters pairing mode

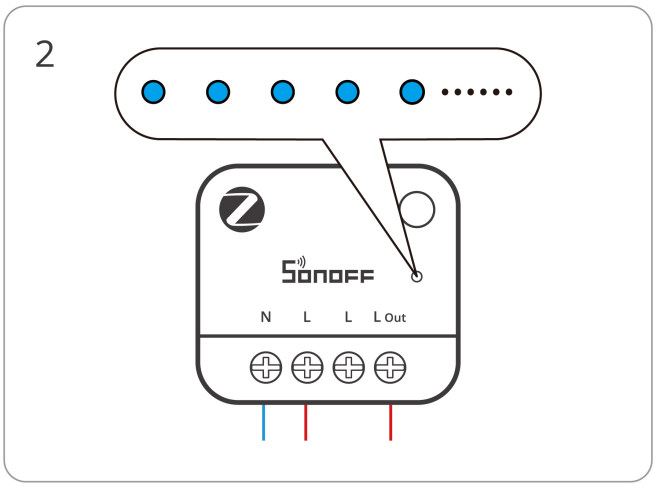

Check that the LED is slowly flashing

ITEAD - 黎业军(2602432)

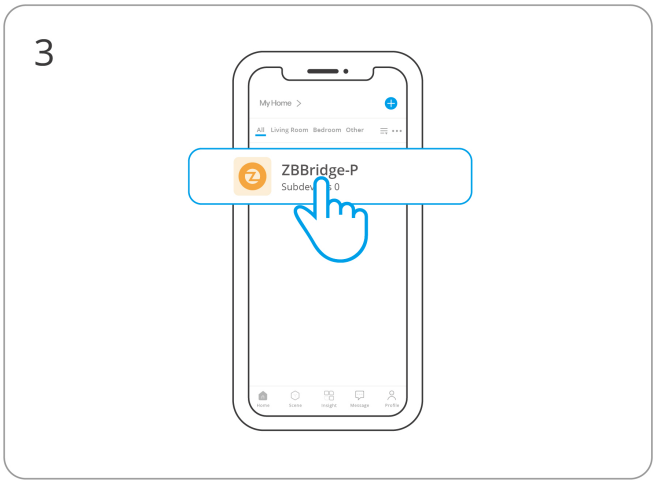

Select the gateway on the eWeLink app home page

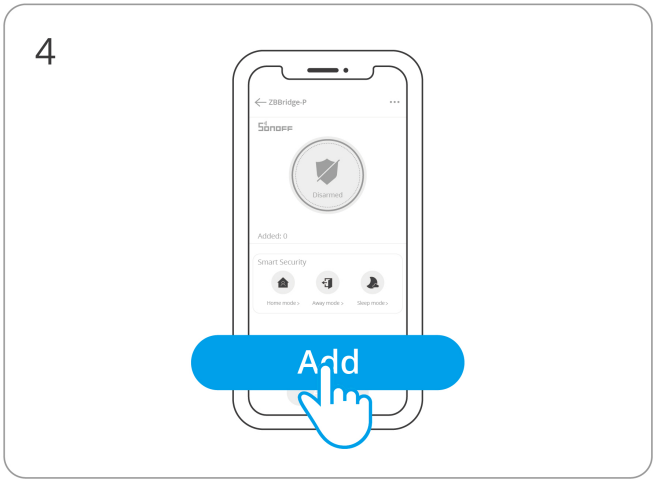

Find and click "Add Device" in the gateway page

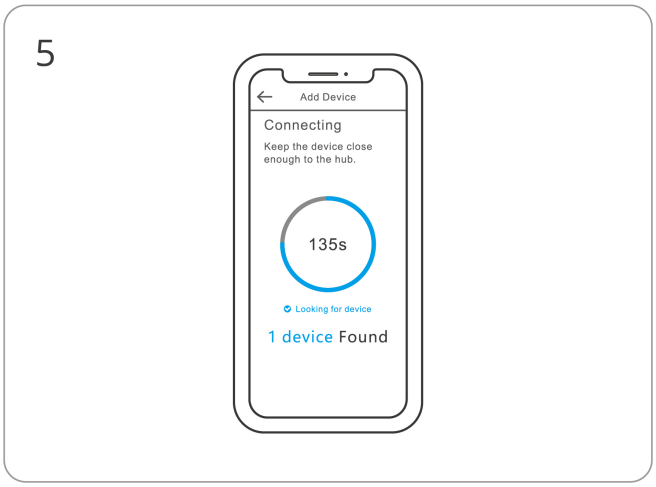

Gateway enters pairing mode, wait for pairing to complete

Install the Device in the Mounting Box

ITEAD - 黎业军(2602432)

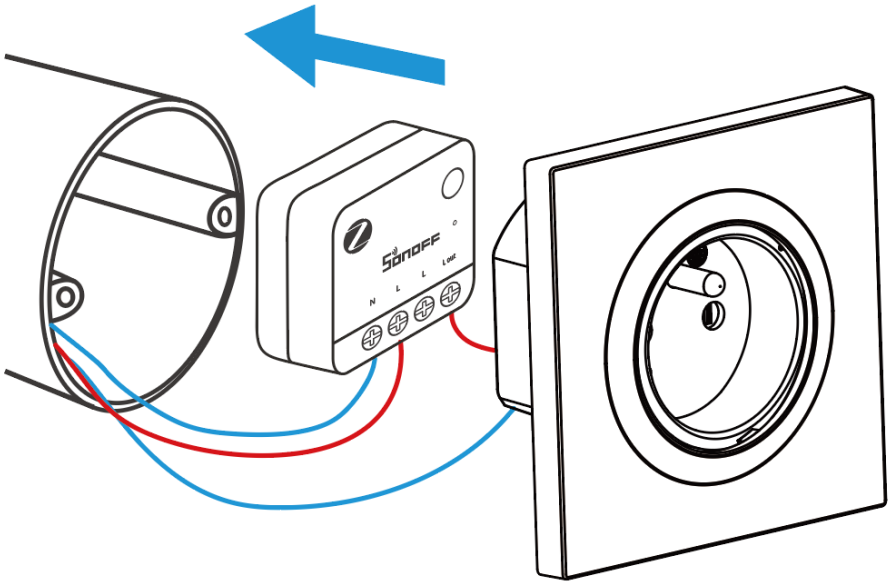

How to View Metering Data

After adding the device to the eWeLink App, select the device from the home page to enter the main device interface, where you can view voltage, current, and power information.

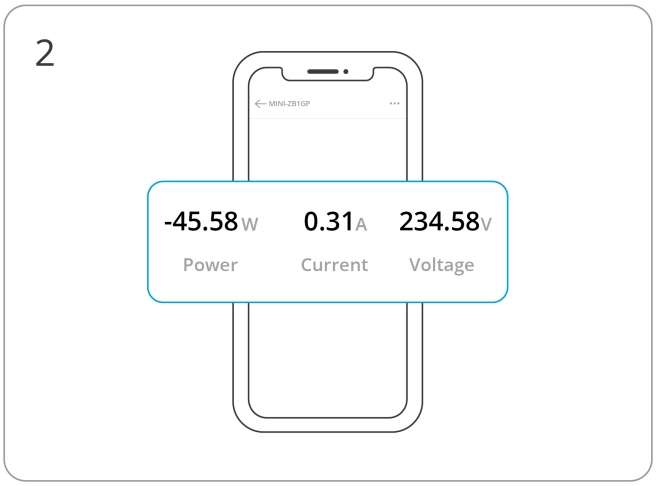

Factory Reset

Trigger conditions (any of the following):

- Delete the device from the eWeLink App.
- Press and hold the button for 10 seconds.

FCC compliance statement

Responsible Party Name: SONOFF TECHNOLOGY LLC

Address: 14777 NE 40th St, Suite 201 Bellevue, WA 98007

Email Address: usres@itead.cc FCC ID: 2APN5-MINIZB1GP

1. This device complies with part 15 of the FCC Rules. Operation is subject to the following two conditions:

(1) This device may not cause harmful interference, and

(2) This device must accept any interference received, including interference that may cause undesired operation.

2. Changes or modifications not expressly approved by the party responsible for compliance could void the user's authority to operate the equipment.

Note: This equipment has been tested and found to comply with the limits for a Class B digital device, pursuant to part 15 of the FCC Rules. These limits are designed to provide reasonable protection against harmful interference in a residential installation. This equipment generates, uses and can radiate radio frequency energy and, if not installed and used in accordance with the instructions, may cause harmful interference to radio communications. However, there is no guarantee that interference will not occur in a particular installation. If this equipment does cause harmful interference to radio or television reception, which can be determined by turning the equipment off and on, the user is encouraged to try to correct the interference by one or more of the following measures:

—Reorient or relocate the receiving antenna.

—Increase the separation between the equipment and receiver.

—Connect the equipment into an outlet on a circuit different from that to which the receiver is connected.

—Consult the dealer or an experienced radio/TV technician for help.

FCC Radiation Exposure statement:

This equipment complies with FCC radiation exposure limits set forth for an uncontrolled environment.

This equipment should be installed and operated with a minimum distance of 20 cm between the radiator and your body.

This transmitter must not be co-located or operating in conjunction with any other antenna or transmitter.

EU Declaration of Conformity

Hereby, Shenzhen Sonoff Technologies Co., Ltd. declares that the radio equipment type

MINI-ZB1GP is in compliance with Directive 2014/53/EU. The full text of the EU declaration of conformity is available at the following internet address: https://sonoff.tech/compliance/

For CE Frequency

EU Operating Frequency Range:

Zigbee: 2405—2480 MHz

BLE: 2402—2480 MHz

EU Output Power:

Zigbee≤10dBm

BLE≤10dBm

Under normal use of condition, this equipment should be kept a separation distance of at least 20 cm between the antenna and the body of the user.

WEEE Disposal and Recycling Information

ITEAD - 黎业军(2602432)

WEEE Disposal and Recycling Information All products bearing this symbol are waste electrical and electronic equipment (WEEE as in directive 2012/19/EU) which should not be mixed with unsorted household waste. Instead, you should protect human health and the environment by handing over your waste equipment to a designated collection point for the recycling of waste electrical and electronic equipment, appointed by the government or local authorities. Correct disposal and recycling will help prevent potential negative consequences to the environment and human health. Please contact the installer or local authorities for more information about the location as well as terms and conditions of such collection points.

Scatola	Manuale
PAP 21	PAP 22
Carta	Carta
RACCOLTA DIFFERENZIATA	
Verifica le disposizioni del tuo Comune. Separa le componenti e conferiscile in modo corretto.	

Manufacturer: Shenzhen Sonoff Technologies Co., Ltd.

Address: 3F & 6F, Bldg A, No. 663, Bulong Rd, Shenzhen, Guangdong, 518000, China

Service email: support@itead.cc Website: sonoff.tech

Made in China

ITEAD - 黎业军(2602432)

FR

Cet appareil se recycle

À DÉPOSER EN MAGASIN

OU

À DÉPOSER EN DÉCHÈTERIE

Points de collecte sur www.quefairedemesdechets.fr
Privilégiez la réparation ou le don de votre appareil !

AD - 黎业军(2602432)