User Manual MINI-ZB1GSP (EN)

Zigbee Smart Switch

User Manual V1.0

Product Introduction

The MINI-ZB1GSP is a compact Zigbee 3.0 single-channel neutral-and-live-wire switch with power monitoring capability. It can be installed in a switch junction box and supports a maximum load of 16A, turning a regular switch into a smart switch. With repeater functionality, it easily improves Zigbee communication quality and can also be linked with other devices in smart scenes to realize your home automation.

Remote Control

Smart Timer/Delay

Voice Control

Energy Monitoring

ITEAD - 黎业军(2602432)

Power-On State

Inching Mode

Repeater Function

Supports loads up to 16A

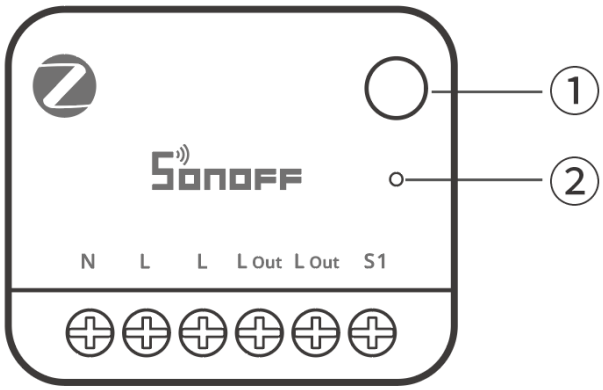

① Button

- Single press: Turn the device on or off
- Press and hold for 5 seconds: Device enters pairing mode (Zigbee pairing + Bluetooth pairing, pairing lasts for 3 minutes).
- Short-press once, then press and hold for 5 seconds within 3 seconds: Activates Bluetooth pairing mode (only effective after pairing with a Zigbee gateway).
- Press and hold for 10 seconds: Factory reset.

② LED Indicator (Blue)

- Slow flashing for 180 seconds: First power-on, entering pairing state (Zigbee pairing + Bluetooth pairing).
- Steady off: Pairing failed/timed out.
- Steady on: Connected to the gateway normally.
- Fast flashing: Abnormal connection to the gateway.
- Flash three times quickly: Switch the external switch trigger type.
- Two fast flashes followed by one slow flash: Bluetooth pairing mode active.

Platform Certification

works with alexa

Specification

MINI ONE PM（Zigbee Version）	
Product Series	MINI Extreme Series Gen5
Product Name	Zigbee Smart Switch
Product Model	MINI-ZB1GSP
MCU	EFR32MG21
Rating	16A 100-240V~ 50/60Hz Max Resistive load μ
Zigbee	IEEE 802.15.4
Net Weight	27.3g
Dimensions	39.5 × 33 × 16.8mm
Color	White+Green
Housing Material	PC
Recommended Wire Gauge	18 AWG to 14 AWG (0.75mm^2 to 2.5mm^2) SOL/STR copper conductor only
Installation Location	Indoor concealed installation
Operating Temperature	-10℃ ~ 40℃
Operating Humidity	10%~90% RH, non-condensing
FCC ID	2APN5-MINIZB1GSP
Certifications	CE / RoHS / FCC

Installation

1. Power Off

ITEAD - 黎业军(2602432)

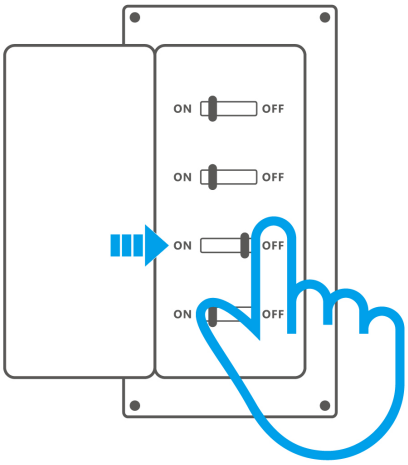

Warnings:

① Installation and troubleshooting must be performed by a qualified electrician. Do not perform wiring or touch terminals while the device is powered on to avoid electric shock!

② To ensure safe electrical installation, a miniature circuit breaker (MCB) or residual current operated circuit breaker (RCBO) rated at 16A and compliant with national safety standards must be installed ahead of the MINI-ZB1GSP.

③ For single-phase use only (100-240V~). Connecting to a multi-phase power supply may damage the device.

2. Wiring Instruction

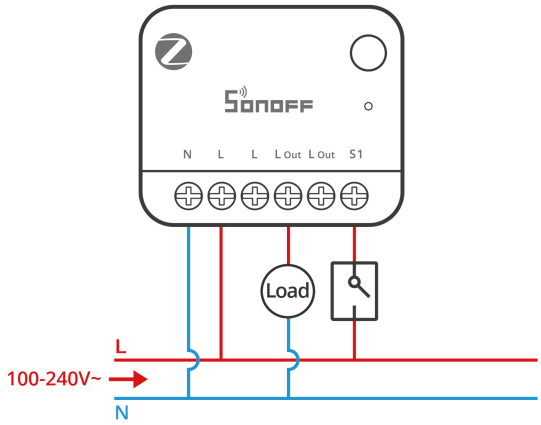

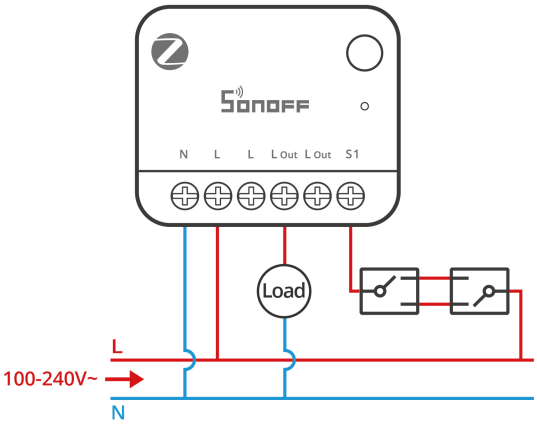

ITEAD - 黎业军(2602432)

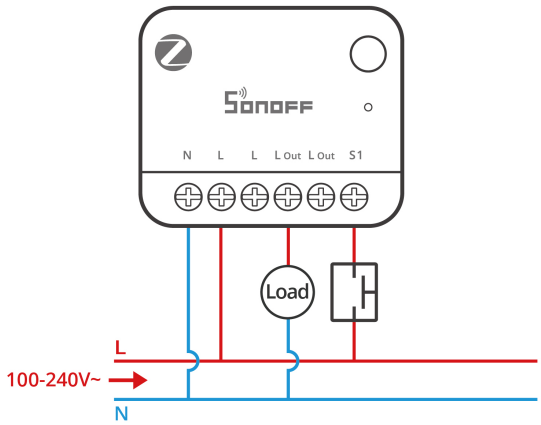

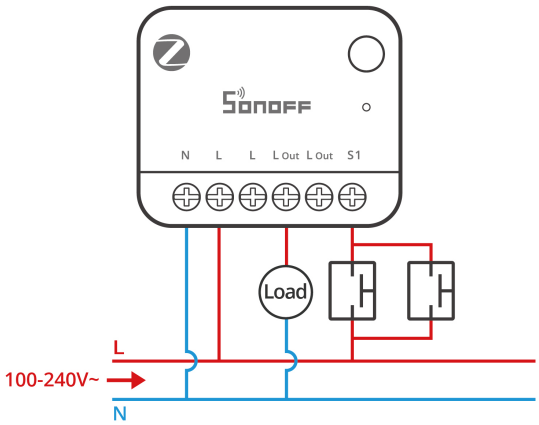

Terminal		Wire	
N	Neutral wire	N	Neutral wire
L	Live wire	L	Live wire (100–240V~)
L	Live wire	L	Live wire (100–240V~)
L Out	Live wire output terminal	Load	The two L Out terminals are internally connected for wiring convenience only and do not increase the rated current capacity.
L Out	Live wire output terminal	Load	
S1	Switch		

ⓘ Do not connect the S1 terminal to the neutral or ground wire, as this may damage the device and cause a hazard.

ⓘ Ensure the wiring is correct.

ⓘ The external switch type supports toggle switches and momentary switches. The default factory setting supports toggle switches.

Switch type switching method: Short-press the button three times until the indicator flashes quickly three times — the switch type has been successfully switched.

3. Power On

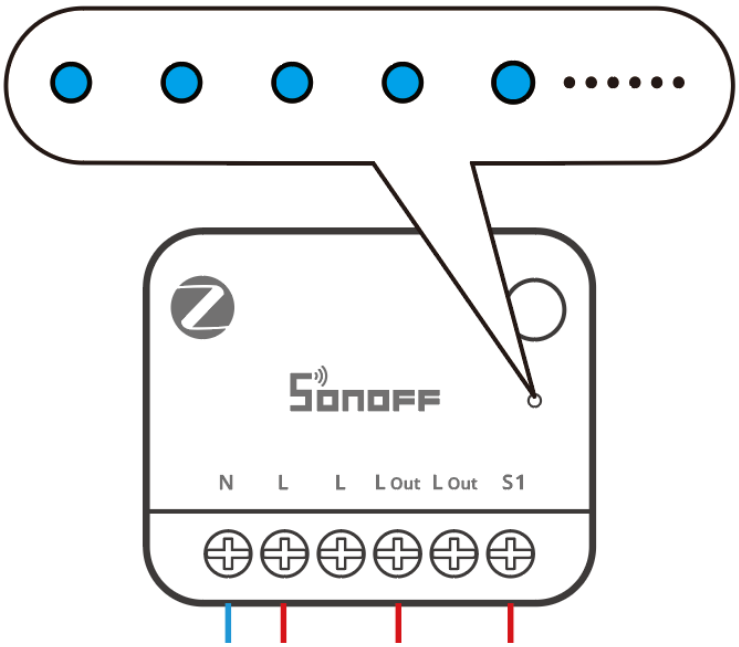

After power-on, the device enters pairing mode by default for first-time use, with the LED slowly flashing.

ⓘ If no pairing is performed within 3 minutes, the device exits pairing mode. To re-enter pairing mode, press and hold the button for 5 seconds until the LED slowly flashes.

Download the eWeLink App

Please download the "**eWeLink**" App from the **Google Play Store** or **Apple App Store**.

Add a SONOFF Zigbee Gateway

Compatible Gateways：

Recommended SONOFF gateway models: ZBBridge-P, ZBBridge-U, NSPanel Pro, iHost
Other compatible SONOFF gateway models: ZBDongle-P, ZBDongle-E

Add Device

Method 1: Scan QR Code

1

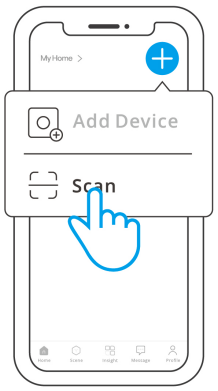

Open "Scan" in the app

2

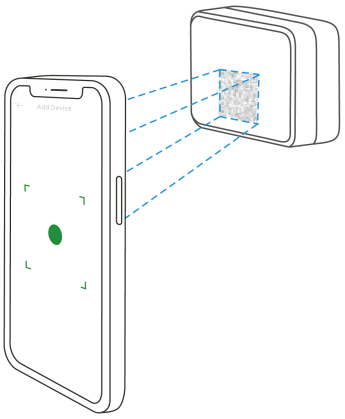

Scan the QR code on the device

3

Select "Add Device"

4

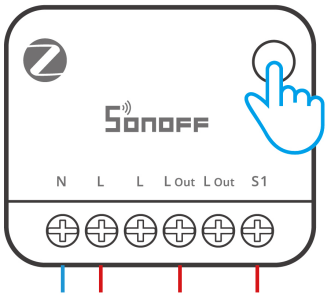

(If device exits pairing mode) Press and hold the button for 5 seconds

ITEAD - 黎业军(2602432)

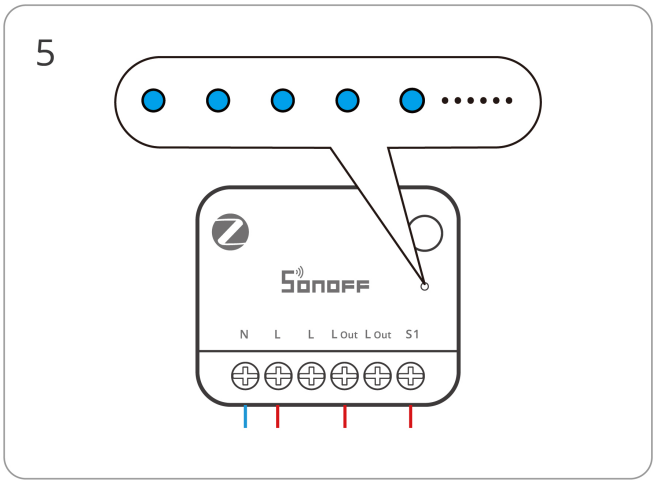

Check that the LED is slowly flashing

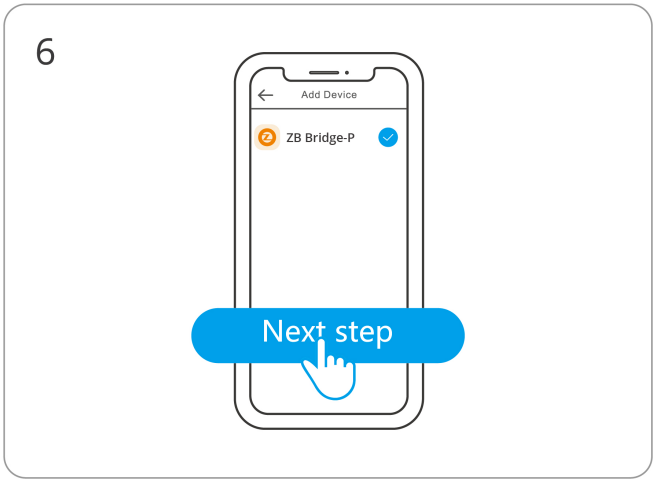

Select the Zigbee gateway

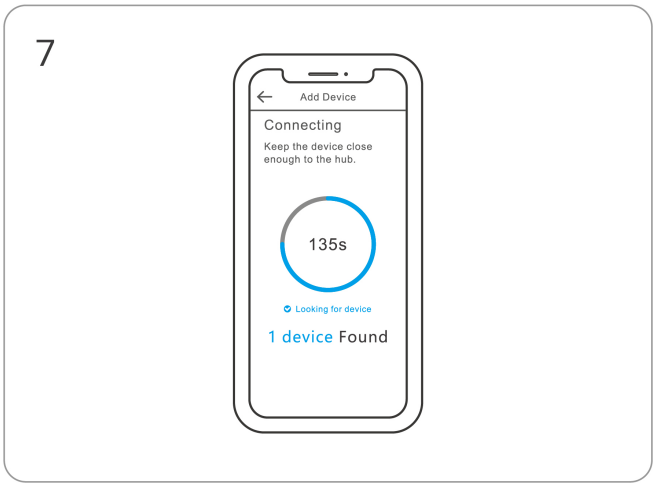

Add device and select "Finish"

Method 2: Activate Gateway Pairing Mode

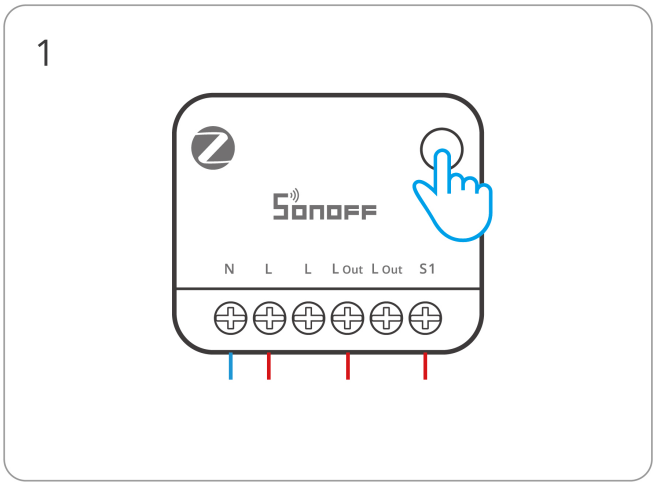

Press and hold the button for 5 seconds to confirm the device enters pairing mode

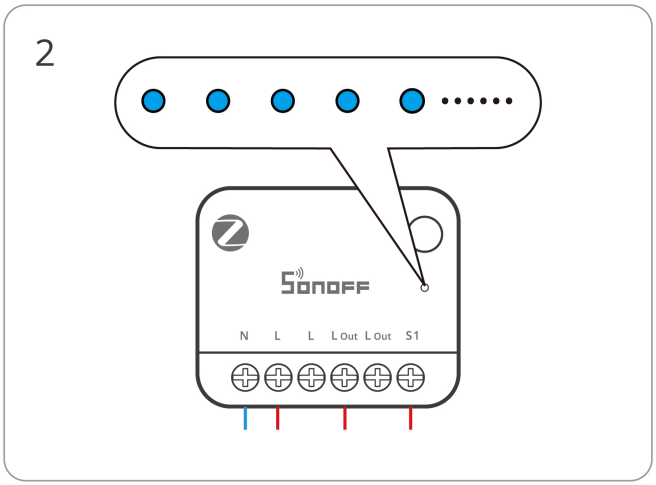

Check that the LED is slowly flashing

ITEAD - 黎业军(2602432)

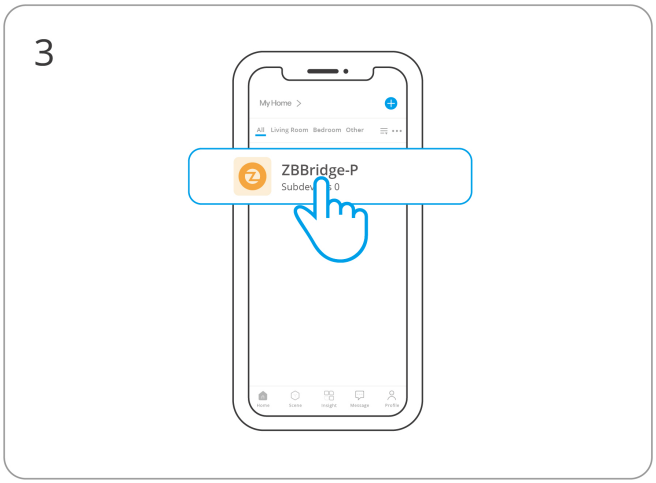

Select the gateway on the eWeLink app home page

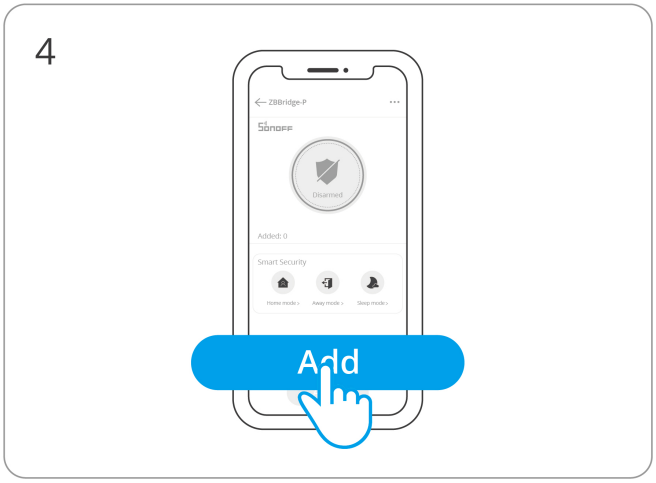

Find and click "Add Device" in the gateway page

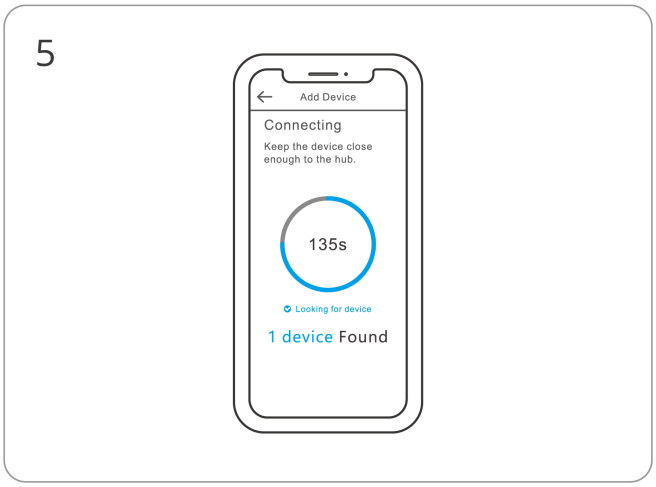

Gateway enters pairing mode, wait for pairing to complete

Install the Device in an Electrical Box

ITEAD - 黎业军(2602432)

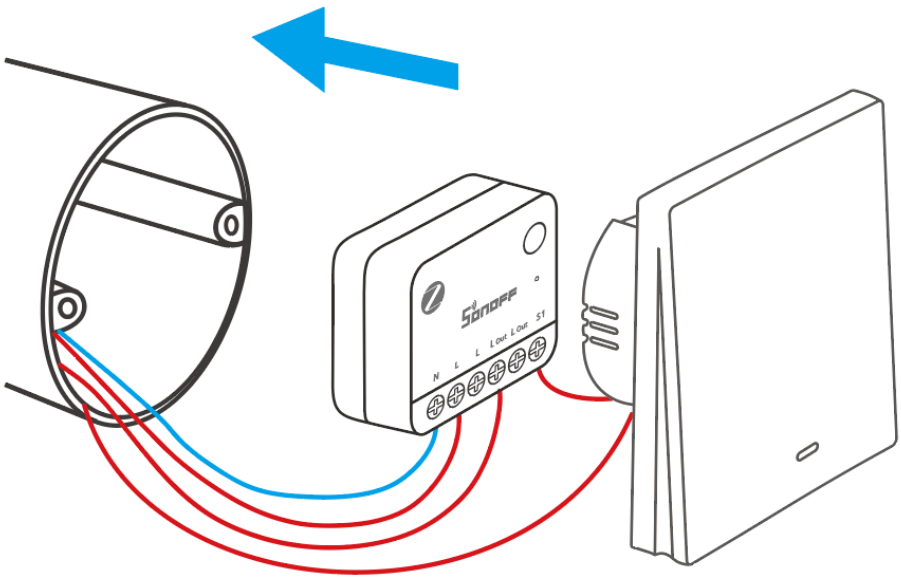

Factory Reset

Trigger conditions (any of the following):

- Delete the device from the eWeLink App.
- Press and hold the button for 10 seconds.

FCC compliance statement

Responsible Party Name: SONOFF TECHNOLOGY LLC

Address: 14777 NE 40th St, Suite 201 Bellevue, WA 98007

Email Address: usres@itead.cc FCC ID: 2APN5-MINIZB1GSP

1. This device complies with part 15 of the FCC Rules. Operation is subject to the following two conditions:

(1) This device may not cause harmful interference, and

(2) This device must accept any interference received, including interference that may cause undesired operation.

ITEAD - 黎业军(2602432)

2. Changes or modifications not expressly approved by the party responsible for compliance could void the user's authority to operate the equipment.

Note: This equipment has been tested and found to comply with the limits for a Class B digital device, pursuant to part 15 of the FCC Rules. These limits are designed to provide reasonable protection against harmful interference in a residential installation. This equipment generates, uses and can radiate radio frequency energy and, if not installed and used in accordance with the instructions, may cause harmful interference to radio communications. However, there is no guarantee that interference will not occur in a particular installation. If this equipment does cause harmful interference to radio or television reception, which can be determined by turning the equipment off and on, the user is encouraged to try to correct the interference by one or more of the following measures:

—Reorient or relocate the receiving antenna.

—Increase the separation between the equipment and receiver.

—Connect the equipment into an outlet on a circuit different from that to which the receiver is connected.

—Consult the dealer or an experienced radio/TV technician for help.

FCC Radiation Exposure statement:

This equipment complies with FCC radiation exposure limits set forth for an uncontrolled environment.

This equipment should be installed and operated with a minimum distance of 20 cm between the radiator and your body.

This transmitter must not be co-located or operating in conjunction with any other antenna or transmitter.

EU Declaration of Conformity

Hereby, Shenzhen Sonoff Technologies Co., Ltd. declares that the radio equipment type

MINI-ZB1GSP is in compliance with Directive 2014/53/EU. The full text of the EU declaration of conformity is available at the following internet address: https://sonoff.tech/compliance/

For CE Frequency

EU Operating Frequency Range:

Zigbee: 2405—2480 MHz

BLE: 2402—2480 MHz

EU Output Power:

Zigbee≤10dBm

BLE≤10dBm

Under normal use of condition, this equipment should be kept a separation distance of at least 20 cm between the antenna and the body of the user.

WEEE Disposal and Recycling Information

WEEE Disposal and Recycling Information All products bearing this symbol are waste electrical and electronic equipment (WEEE as in directive 2012/19/EU) which should not be mixed with unsorted household waste. Instead, you should protect human health and the environment by handing over your waste equipment to a designated collection point for the recycling of waste electrical and electronic equipment, appointed by the government or local authorities. Correct disposal and recycling will help prevent potential negative consequences to the environment and human health. Please contact the installer or local authorities for more information about the location as well as terms and conditions of such collection points.

Scatola	Manuale
PAP 21	PAP 22
Carta	Carta
RACCOLTA DIFFERENZIATA	
Verifica le disposizioni del tuo Comune. Separa le componenti e conferiscile in modo corretto.	

ITEAD - 黎业军(2602432)

Manufacturer: Shenzhen Sonoff Technologies Co., Ltd.

Address: 3F & 6F, Bldg A, No. 663, Bulong Rd, Shenzhen, Guangdong, 518000, China

Service email: support@itead.cc Website: sonoff.tech

Made in China

Points de collecte sur www.quefairedemesdechets.fr
Privilégiez la réparation ou le don de votre appareil !