User Manual TRV-ZBT (EN)

Zigbee Thermostatic Radiator Valve

User Manual V1.0

https://sonoff.tech/en-us/blogs/news/adapter-selection-guide

Remove the old thermostatic head, check if a valve adapter is required, then scan the QR code or enter the URL to select the corresponding valve adapter.

Introduction

ITEAD - 黎业军(2602432)

TRV Gen2 is a smart thermostatic radiator valve designed to precisely regulate your radiator, enabling accurate control of your room temperature. The device supports app-based remote control and allows users to set smart schedules for automated temperature management. It features a built-in intelligent temperature control algorithm and window-open detection, which automatically adjusts the valve status when environmental changes are detected, helping to reduce energy waste. With the included adapters, it is compatible with most standard valve interfaces.

Remote Control

Dual-Mode Connectivity

Remote Temperature Source

Smart Precise Temp Control

Smart Schedule

Compact Design

HD IPS Screen

Open Window Detection

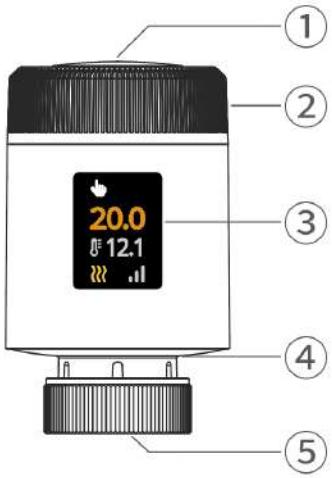

① **Middle Button**

② **Rotary Knob Button**

③ **IPS Color Display**

④ **Battery Cover Latch**

⑤ **Radiator Valve Union Nut**

Screen Display & Description

Screen Display	Description

20.0 12.1	The large font indicates the set temperature, and the small font indicates the current room temperature. Rotate the device knob to adjust the set temperature. The setting will be saved automatically 2 seconds after you stop rotating. You can also press the middle button to save the current setting immediately.
	One bar: Weak signal strength Two bars: Medium signal strength Three bars: Strong signal strength
	Heating
	Auto Mode *When adjusting the temperature manually under Auto mode, the manual setting will take effect temporarily until the next schedule starts, after which the schedule will resume. Both the Manual " " and Auto " " icons will be displayed on the screen during this period.
	Manual Mode Short press the device button to switch between Auto mode and Manual mode.
OFF	OFF (Frost Protection mode) (Default: 5°C) After setting the target temperature to the minimum value of 5°C, continue turning the knob toward a lower temperature. The display will show "OFF". After 2 seconds of no operation, the device will automatically save the setting and enter OFF mode. In Frost Protection mode, the app will also display OFF. The minimum set temperature supported by the device is 5°C.
	Network Pairing Indicator When the device is OFF, long press the middle button for 2 seconds to enter pairing mode. The pairing indicator will flash.

Boost	Boost Mode After Boost mode is enabled, the temperature will be set to the maximum value, and the valve will stay open to raise the room temperature. The mode will then turn off automatically and revert to the previous settings. This mode can only be activated via the App. Once activated, the screen will show the word "BOOST" and the corresponding icon " ".
	Open Window Detection (animated prompt) If during heating the room temperature drops by more than 1.5°C within 5 minutes, or the door/window sensor linked to the device detects an open state, the device will initiate open window detection and stop heating. The screen will show a “Window Open” animation. 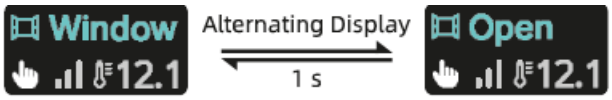 Note: The detection can be cancelled in the following ways: 1. Adjust the temperature or change the mode on the device. 2. The detected temperature rises by more than 1.5°C within 5 minutes. 3. The door/window sensor detects a closed state.
/	Child Lock Device operation can be locked to prevent accidental changes. Long press the middle button for 3 seconds to enable/disable the Child Lock. The screen will display “Child Lock Enabled”/“Child Lock Disabled”.
	Temporary Timer When the Temporary Timer is enabled, the device will operate at the set temperature for a specified duration, after which the Temporary Timer will end, and the device will return to the previous working mode and temperature setting. This function can only be activated in the app.
	Valve Calibration Failed This indicates that the device is not properly installed on the valve. Please reinstall the device correctly.
	Low Battery (replace with new batteries within 1 week)

Specification

Product Series	Thermo Series
Product Name	TRV Gen2
Product Type	Zigbee Thermostatic Radiator Valve
Model	TRV-ZBT
MCU	TLSR8258
Input	3V⎓ (2 × 1.5V batteries)
Battery Type	1.5V LR6 alkaline AA batteries
Zigbee	IEEE 802.15.4
Thread Connection	M30x1.5mm
Temperature Setting Range	5℃-30℃
Net Weight	169 g (with batteries)
Working Temperature	-10℃~50℃
Working Humidity	5% — 95% RH, non-condensing
Color	White
Housing Material	PC
Product Dimension	50×50×82.9mm
Operating Cycle	10,000 cycles
Certification	CE / ROHS

Download the eWeLink App

Please download the "**eWeLink**" App from **Google Play Store** or **Apple App Store**.

Device Installation

1. Rotate the Battery Bottom Cover in the Indicated Direction to Open the Battery Compartment.

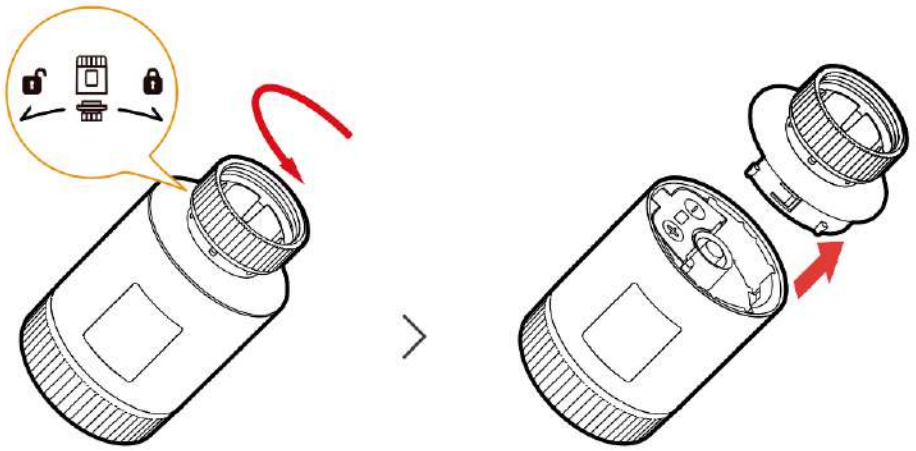

2. Install the Battery Base.

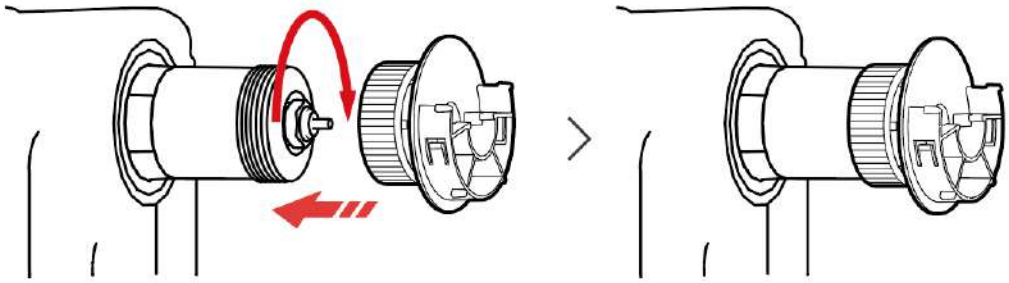

ⓘ Please check if your valve connection is of the **M30 x 1.5 mm** specification.

- If the valve connection is M30 x 1.5 mm, you can install the product directly onto the valve.
- If the valve connection is not M30 x 1.5 mm, you will need to install the valve adapter

ITEAD - 黎业军(2602432)

onto the valve first.

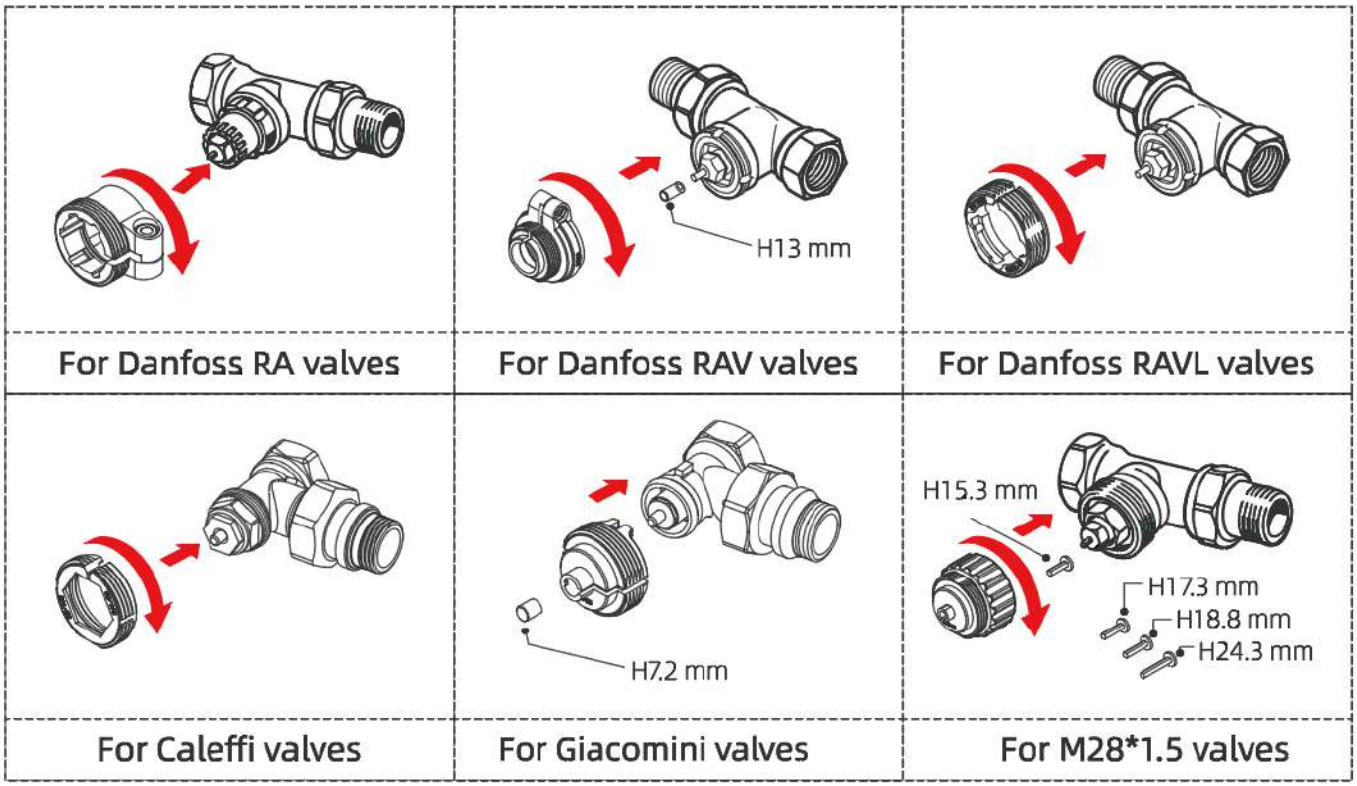

For Danfoss RA valves	For Danfoss RAV valves	For Danfoss RAVL valves
For Caleffi valves	For Giacomini valves	For M28*1.5 valves

3. Scan the QR Code On the Device

Open the eWeLink app and enter "Scan"

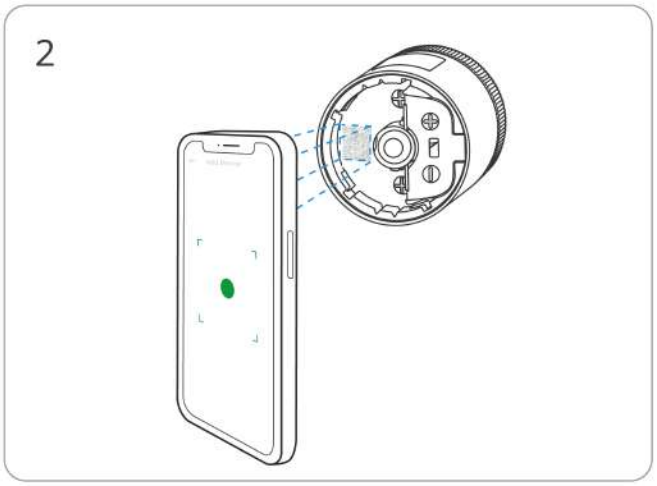

Scan the QR code on the device

4. Power On the Device

ITEAD - 黎业军(2602432)

Remove the battery insulation strip to power on the device.

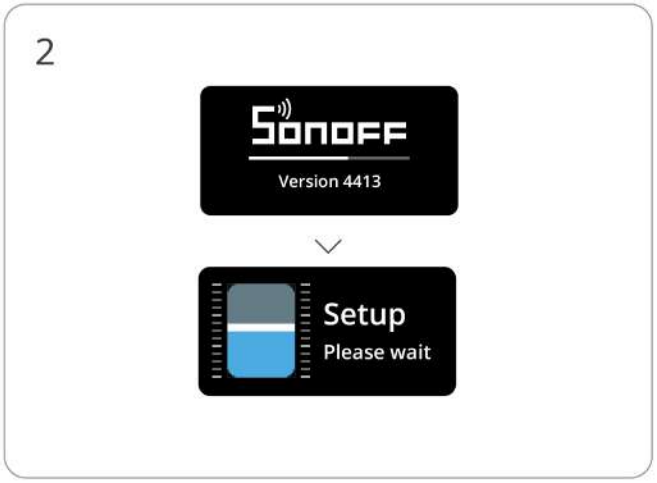

After power-on, the screen will display “Setup”. Double-press the middle button to adjust the screen orientation.

ⓘ When the screen shows “Ready”, short press the device button to return to “Setup”.

5. Install the Device Body

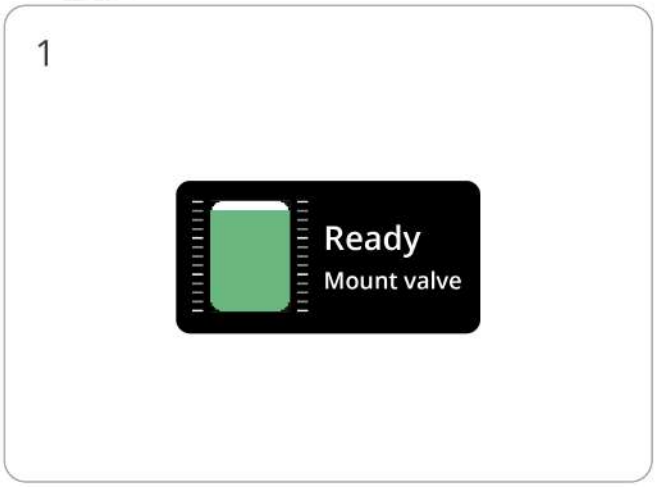

When the screen shows “Ready”

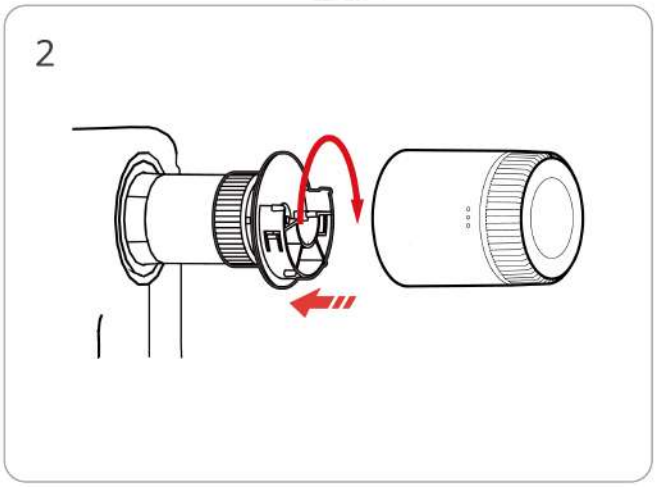

Align the device with the battery base already installed on the valve and rotate it to secure

6. Calibrate the Device

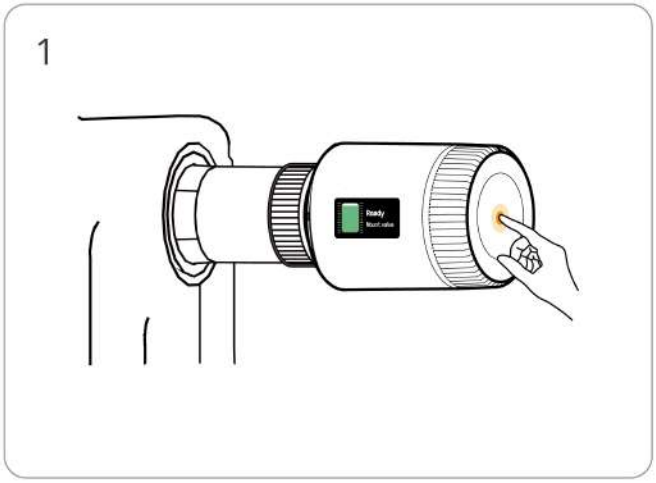

After the device is firmly installed, quickly press the middle button

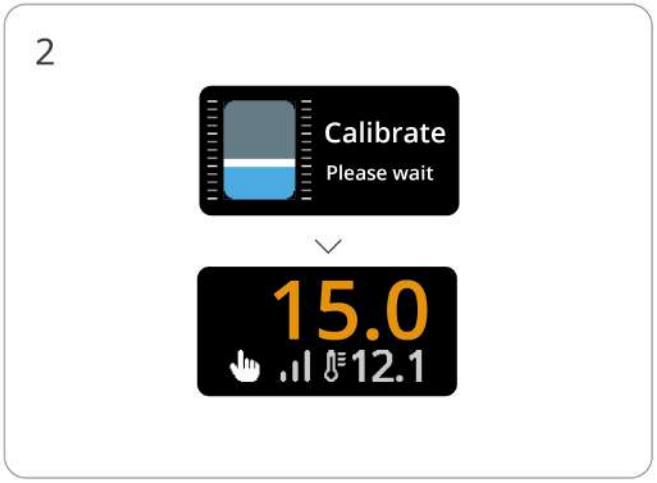

The screen will display a “Calibrate” animation, indicating that the device is adapting to the valve. Upon success, the screen will show the current room temperature

ⓘ If “ 🔧 ” appears, it means the device is not properly installed on the valve. Try the following:

1. Remove and reinsert the batteries to restart the device, repeat the above steps, ensure you have selected the most suitable adapter, and only install the device after the screen displays “Ready”.
2. If you do not want to reinstall the batteries right now, you can skip this prompt and continue with network pairing. After pairing is complete, confirm that the device is correctly installed on the valve, then perform stroke calibration on the eWeLink app in either of the following ways:
   - On the device settings page, tap “Stroke Calibration” to start calibration.
   - On the device details page, tap the calibration prompt to enter the calibration page and start calibration.

Add Device to eWeLink App

Method 1: Zigbee Pairing

1.1. Add SONOFF Zigbee gateway

Compatible Gateways

Recommended SONOFF gateway models	ZBBridge-P, ZBBridge-U, NSPanel Pro, iHost
Other compatible SONOFF gateway models	ZBDongle-P, ZBDongle-E, Dongle-M, Dongle-PMG24, Dongle-LMG21

ⓘ Ensure the Zigbee gateway is updated to the latest version.

1.2. Add Device

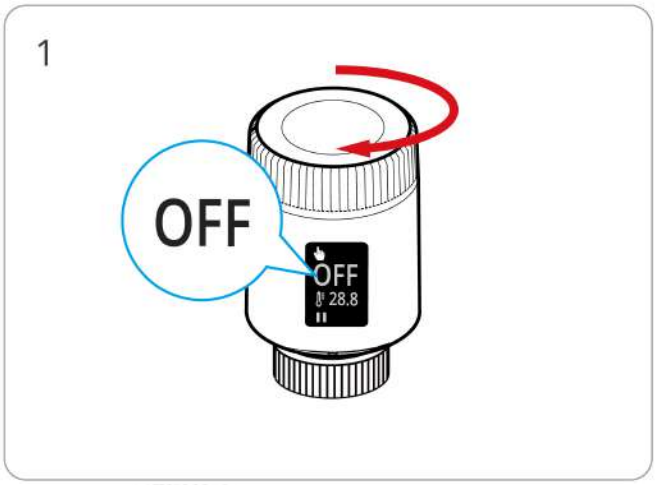

In Manual mode, rotate the knob to lower the set temperature until the screen displays "OFF"

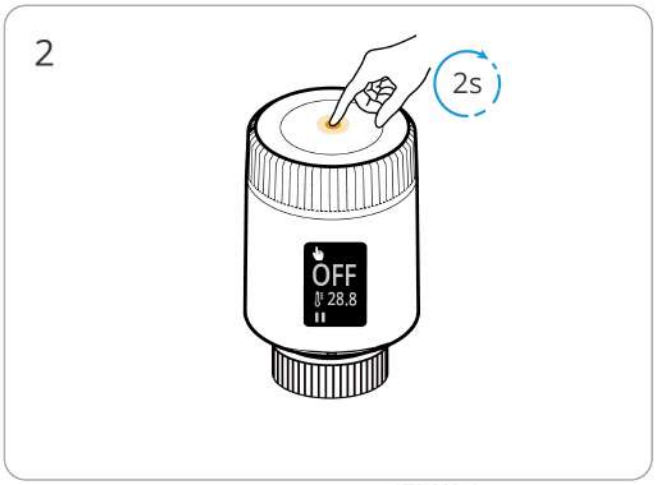

When the device is OFF, long press the middle button for 2 seconds

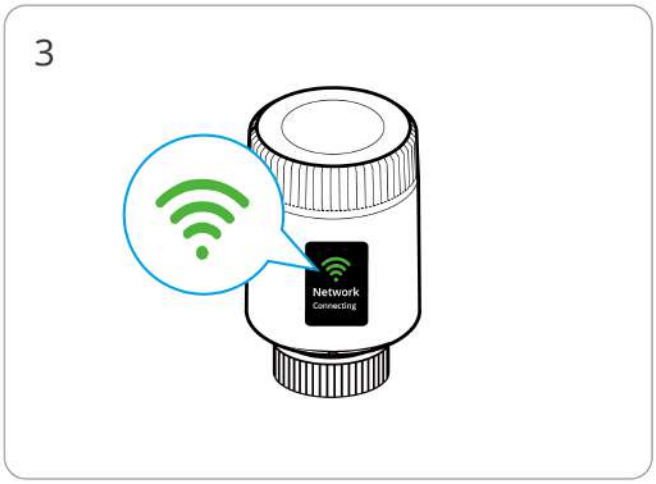

Check that the pairing icon "" is flashing

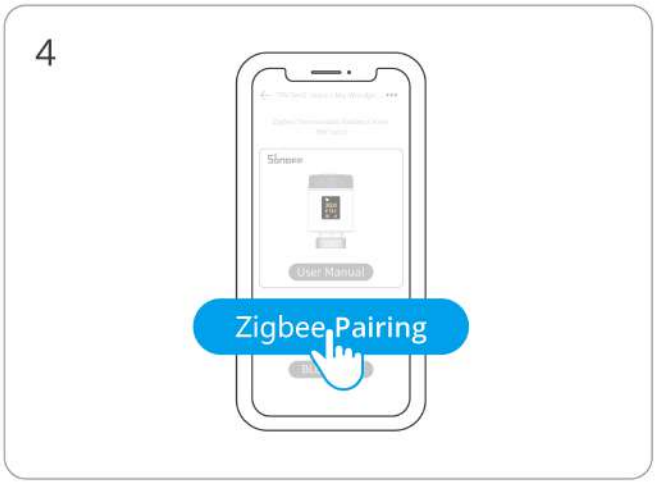

Select "Zigbee Pairing"

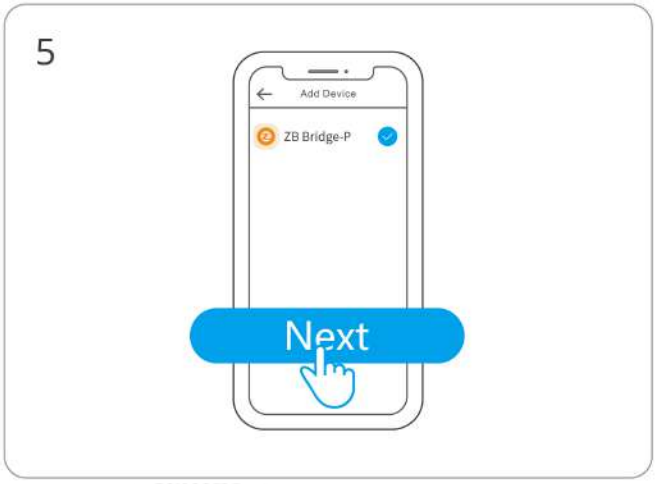

Select Zigbee gateway

Wait until the addition is done

ⓘ Once the device enters pairing mode, it will exit this mode if no gateway pairing is completed within 3 minutes. To re-enter pairing mode, with the screen showing "OFF", long-press the middle button for 2 seconds until the network icon "" on the screen flashes.

Method 2: BLE Pairing

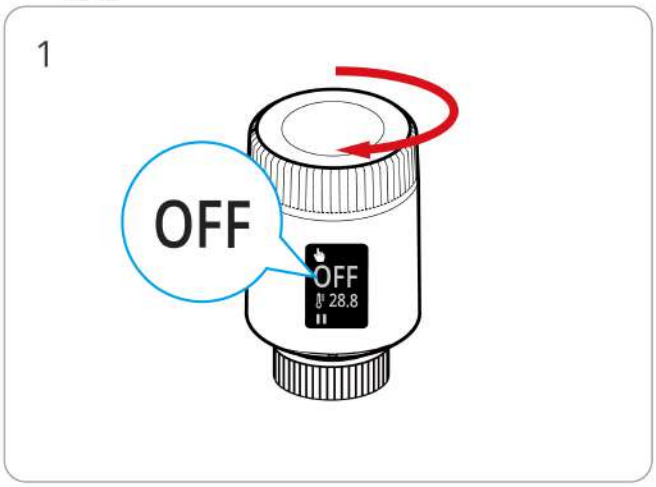

In Manual mode, rotate the knob to lower the set temperature until the screen displays “OFF”

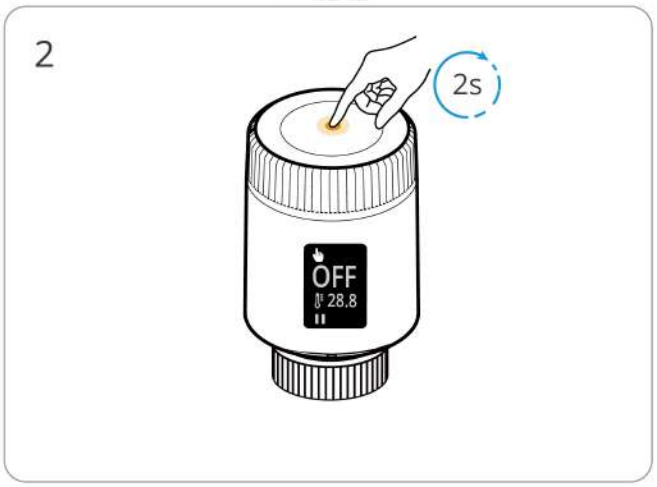

When the device is OFF, long press the middle button for 2 seconds

Check that the pairing icon “ ” is flashing

Select “BLE Pairing”

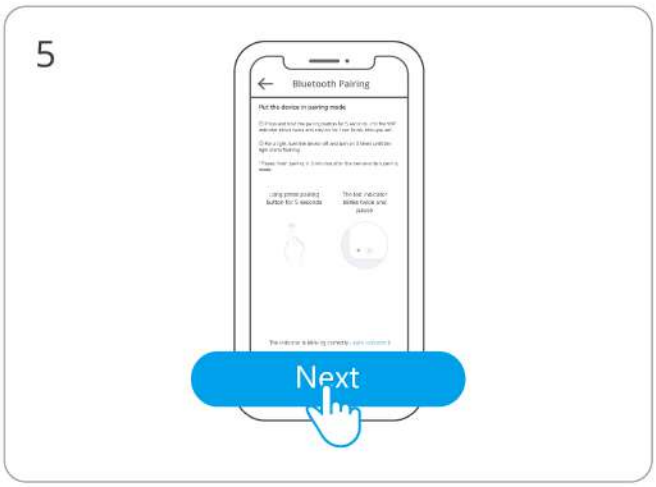

Tap "Next"

Choose the device and tap "connect"

Thermostat Mode

The device has two modes: Auto mode and Manual mode. Short press the middle button to switch between modes.

ITEAD - 黎业军(2602432)

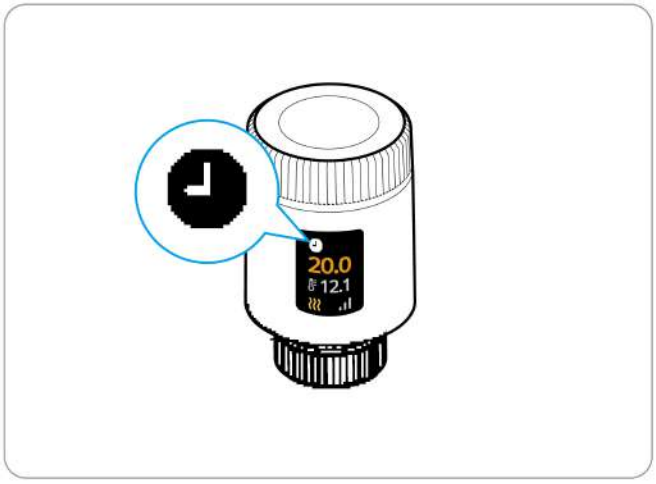

When the screen displays the “ ” icon, it indicates auto mode

When the screen displays the “ ” mode icon, it indicates manual mode

Anti-calcification Function

The device automatically activates every Monday at 12:00 noon for maintenance to prevent valve scaling. During this period, the screen will display “Calibrate”.

Standalone BLE Pairing

If you are not an eWeLink user but are using Home Assistant (HA) or other third-party platforms, you can first wake the device, click the middle button once, and then within 3 seconds long press the middle button for 5 seconds. The device will enter standalone Bluetooth pairing mode without clearing existing data.

Screen Orientation Rotation

Double-press the middle button to rotate the screen orientation 90° clockwise.

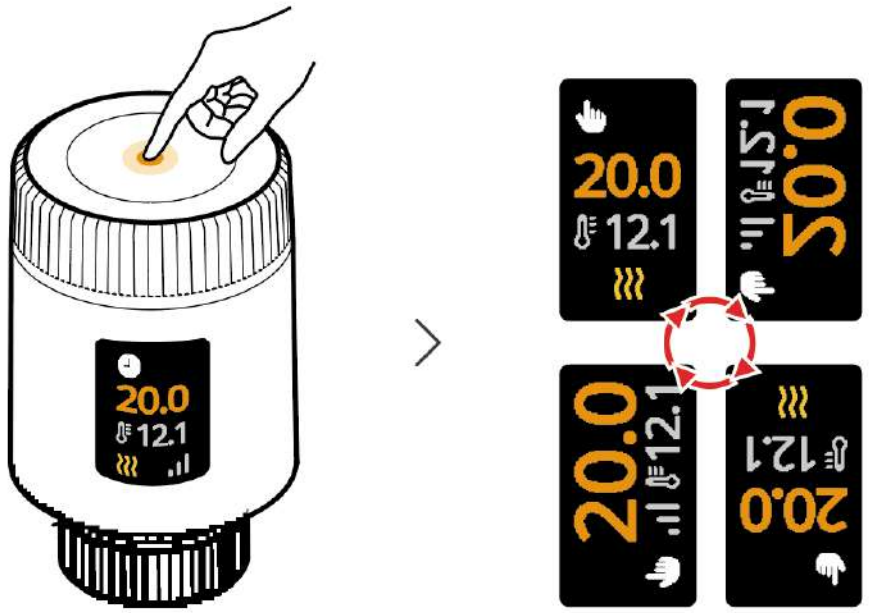

Device-Side Error States and Solutions

Error Code	Issue	Solution
	Battery depleted	Replace the batteries immediately.
	Valve calibration failed	1. Check that the valve is installed correctly and reinstall the device. 2. Follow the prompts in the app to perform automatic calibration.
ERR	Battery abnormal	Replace the batteries and try again.

App-Side Alerts

The following alerts are displayed only in the eWeLink app. The device screen will not show the corresponding error codes. Please follow the instructions in the app.

App Alert	Description	Solution
Low battery, unable to perform firmware update	The current battery level is too low and may affect the stability of the update.	Replace the batteries before performing the firmware update.
Low battery, unable to function normally	The current battery level is critically low and the device may not operate properly.	Replace the batteries immediately.
Internal temperature sensor abnormal	The built-in temperature sensor is detecting an abnormality.	Check the device status. If the issue persists, contact after-sales support.
External temperature sensor abnormal	The external/remote temperature sensor connection is abnormal.	Check whether the external temperature sensor is online, or reconfigure the remote temperature source.

Replace the Batteries

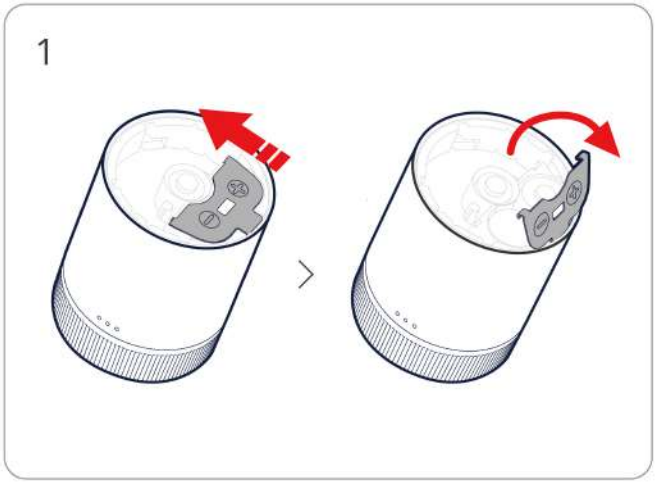

Push the metal spring outward first to release it from the buckle; then lift the metal spring upward to open it.

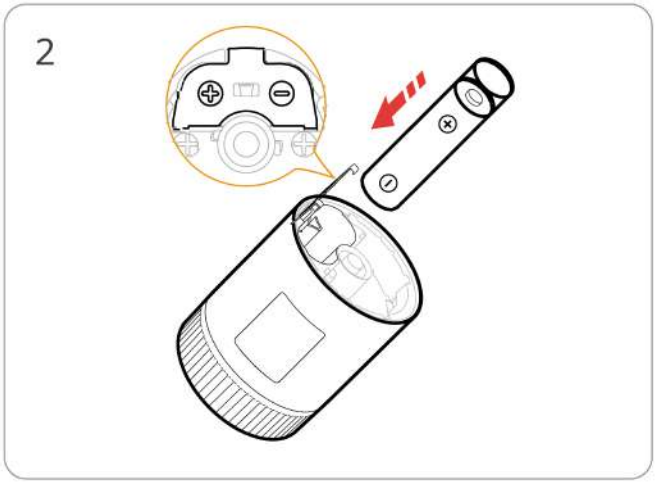

Install the batteries correctly according to the positive and negative polarity markings on the spring, then press the metal buckle back down into place to secure the batteries.

ITEAD - 黎业军(2602432)

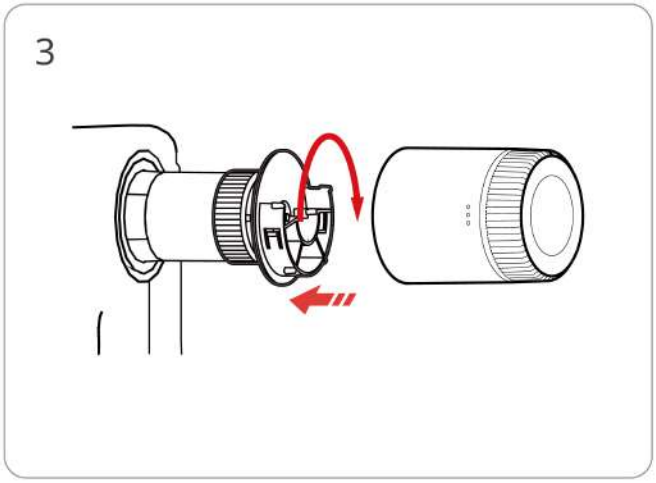

Reinstall the cover and lock it securely.

Remove the Device

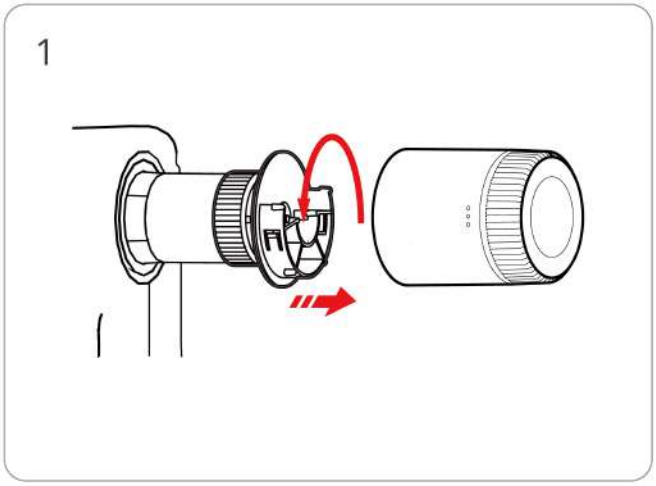

First remove the main device unit.

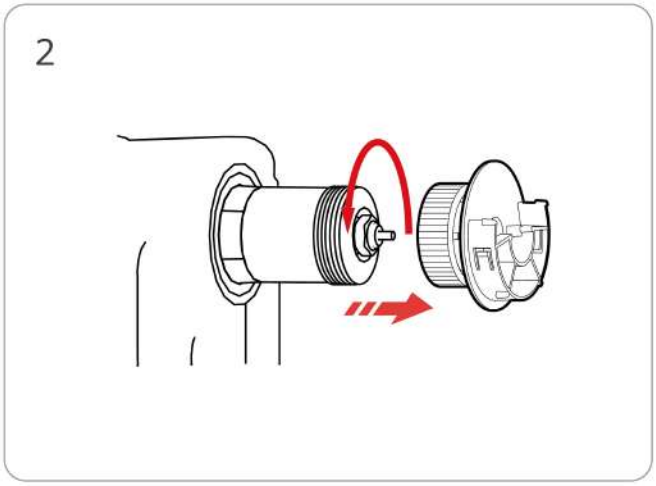

Then remove the device battery base from the valve.

Restore Factory Setting

ITEAD - 黎业军(2602432)

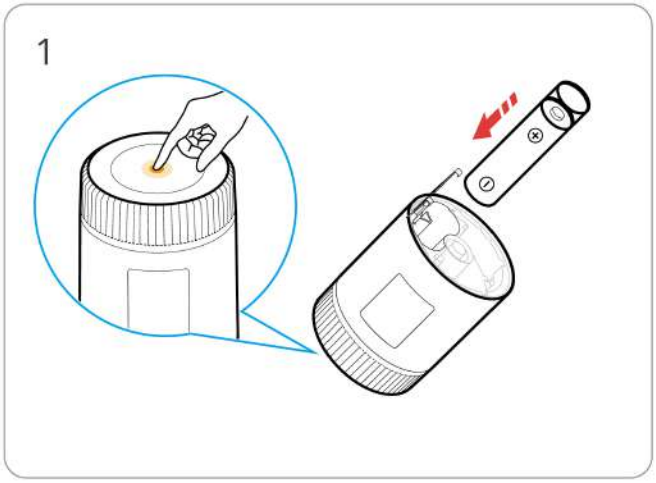

Hold down the Middle Button while inserting the batteries.

The screen will display "Resetting". After several seconds, the device restores factory settings and restarts automatically.

ⓘ All previous settings will be erased after restoring factory settings.

WARNING

· DO NOT use metal short-circuited batteries, Otherwise,the batteries may leak, catch fire, or explode.

· Do not replace a battery with an incorrect type.

· Disposal of a battery into fire or a hot oven, or mechanically crushing or cutting of a battery, that can result in an explosion.

· This appliance contains non-rechargeable batteries, these batteries are not to be recharged.

EU Declaration of Conformity

Hereby, Shenzhen Sonoff Technologies Co., Ltd. declares that the radio equipment type TRV-ZBT is in compliance with Directive 2014/53/EU. The full text of the EU declaration of conformity is available at the following internet address: https://sonoff.tech/compliance/

For CE frequency

EU Operating Frequency Range:

Zigbee: 2405—2480 MHz

BLE: 2402–2480 MHz

EU Output Power:

Zigbee≤10dBm

BLE≤10dBm

Under normal use of condition, this equipment should be kept at a separation distance of at least 20 cm between the antenna and the body of the user.

WEEE Disposal and Recycling Information

WEEE Disposal and Recycling Information All products bearing this symbol are waste electrical and electronic equipment (WEEE as in directive 2012/19/EU) which should not be mixed with unsorted household waste. Instead, you should protect human health and the environment by handing over your waste equipment to a designated collection point for the recycling of waste electrical and electronic equipment, appointed by the government or local authorities. Correct disposal and recycling will help prevent potential negative consequences to the environment and human health. Please contact the installer or local authorities for more information about the location as well as terms and conditions of such collection points.

Scatola	Manuale	Borsa
PAP 20	PAP 22	CPE 7
Carta	Carta	Plastica
RACCOLTA DIFFERENZIATA		
Verifica le disposizioni del tuo Comune. Separa le componenti e conferiscile in modo corretto.		

Manufacturer: Shenzhen Sonoff Technologies Co., Ltd.

Address: 3F & 6F, Bldg A, No. 663, Bulong Rd, Shenzhen, Guangdong, 518000, China

Service email: support@itead.cc Website: sonoff.tech

Made in China

ITEAD - 黎业军(2602432)