User 's Manual

First, Product Layout

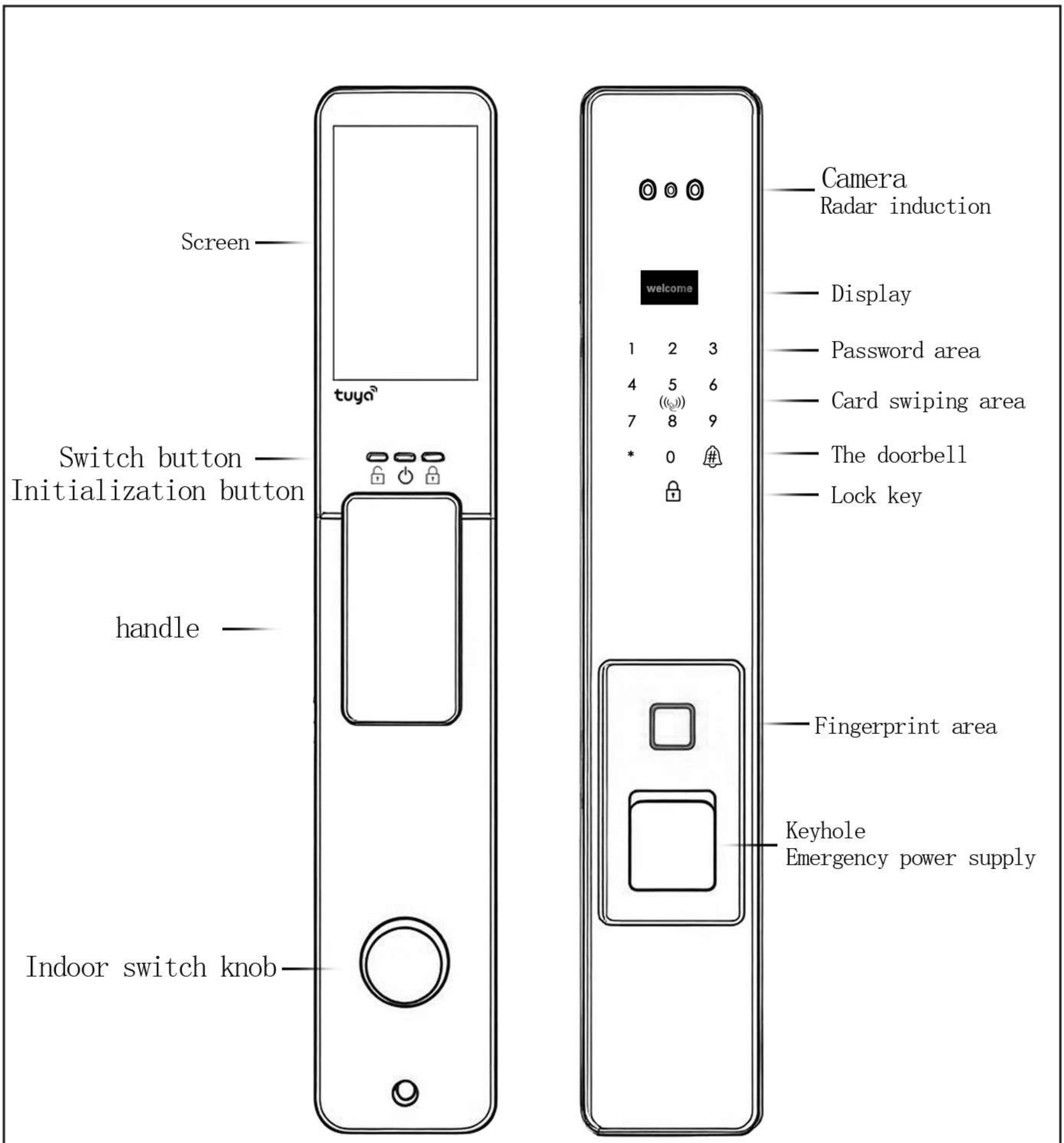

Attention: Please keep the front and rear locks clean during installation

Structure of automatic intelligent lock

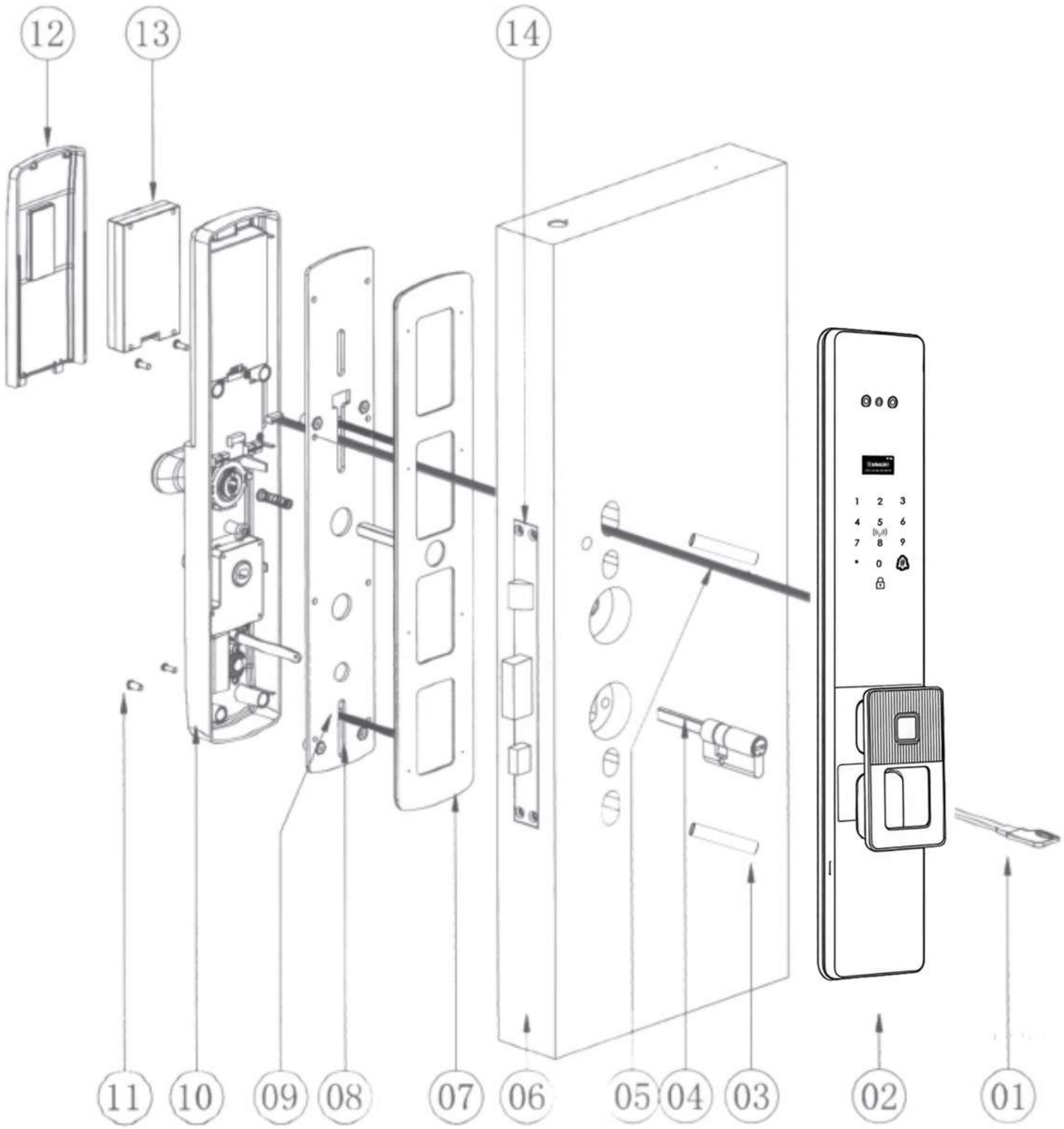

Number	Name	Number
01	Leaf key	2
02	Front lock body	1
03	Fixed column	2
04	Lock cylinder	1
05	Main boardconnecting cable	1
06	Door	
07	Silicone pad	1

Number	Name	Number
08	Rear floor panel	1
09	M5 fixing screw	2
10	Rear panel assembly	1
11	M4 set screw	4
12	Battery cover	1
13	lithium battery	1
14	Lock body	1

Installation diagram of automatic intelligent lock

Installer sketch:

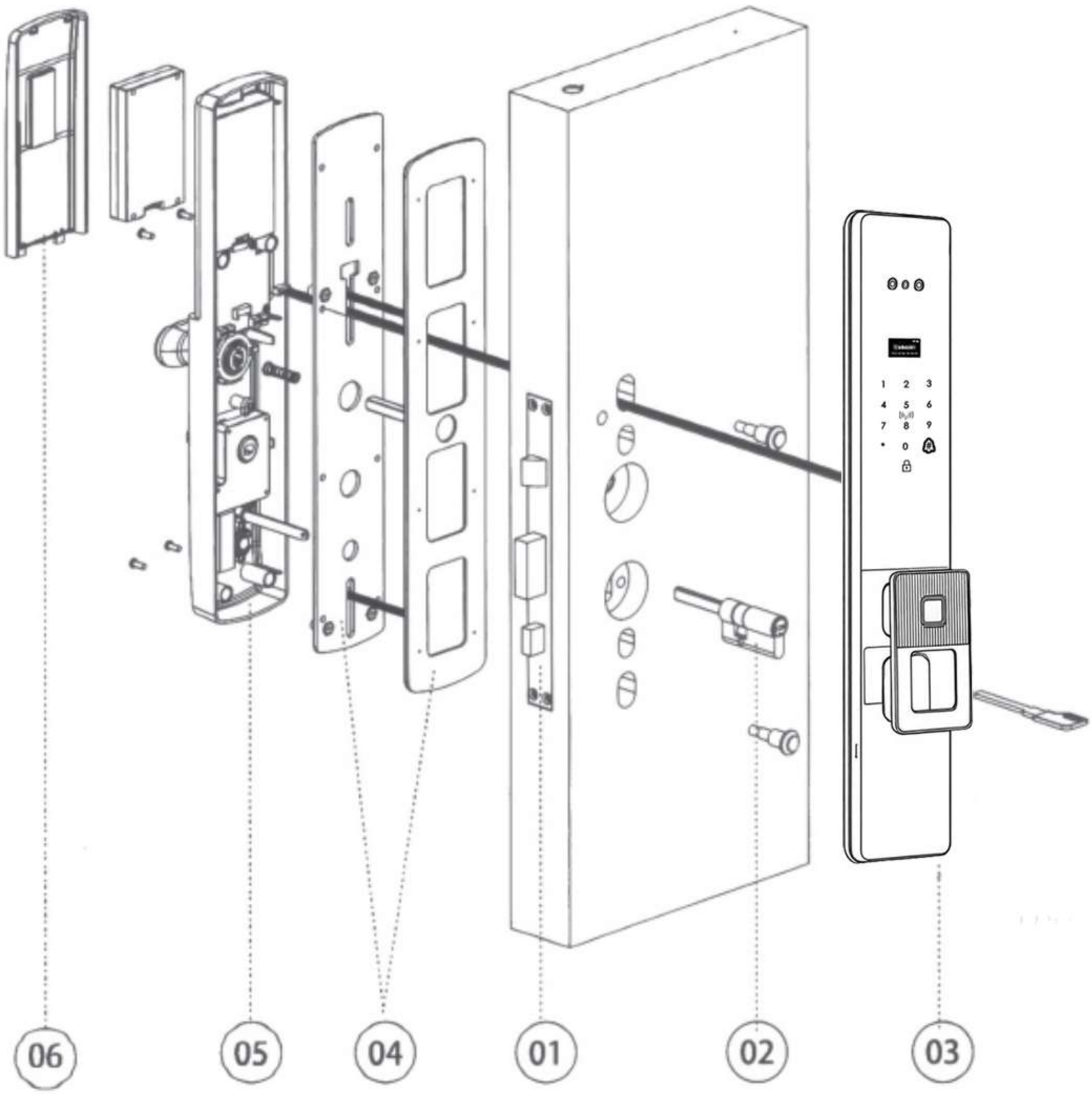

Installation steps

1. install the lock body first and fix the lock body with M5 "6 screws (4 pieces)
2. install the lock cylinder, fix the lock cylinder with the lock cylinder fixing screw,ensure that the copper bar of the lock cylinder rotating shaft faces the room,and the length is 18–20mmt of the exposed door surface (as shown in Fig. 2, the lock cylinder must be installed and then the copper bar should be cut)
3.Install the front panel;
4 install the bottom plate (with rubber pad), and fix the two studs of front panel with M5 screws
5. Connect the front and rear panel data lines, and then install the rear panelaccording to the hole position, and fix it with 4 M4 screws;

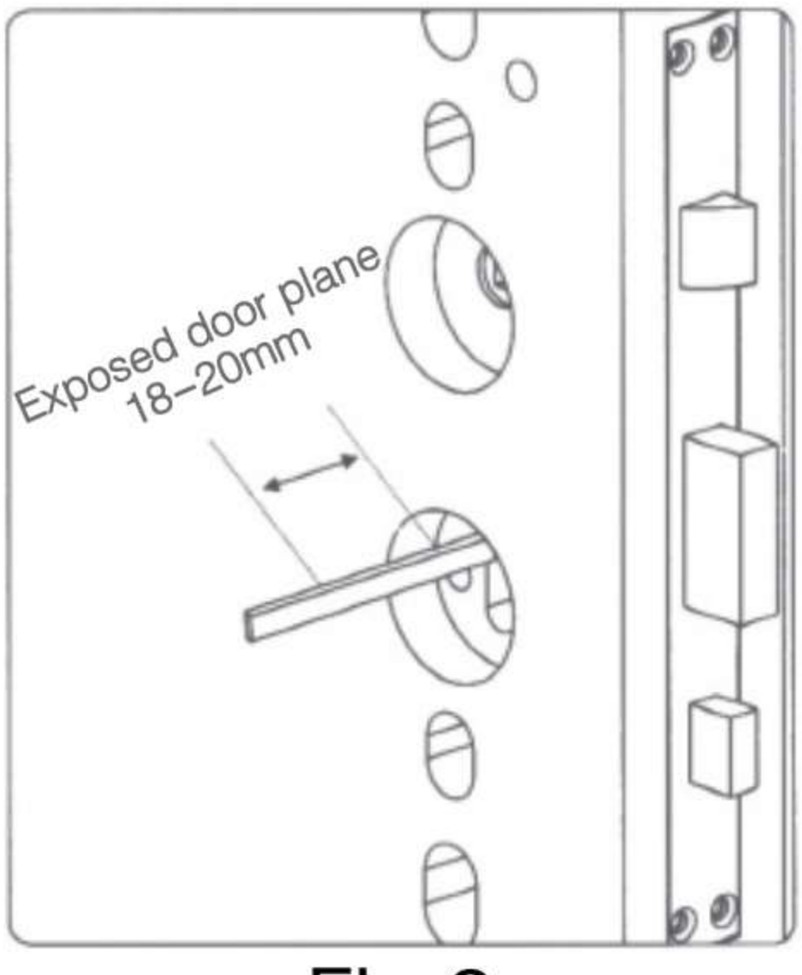

Fig.2

2、Product layout:

- Opening method: fingerprint, password, IC card, mechanical key, WeChat miniprogram and other opening methods bring you different opening experience (specific configuration is subiect to the physical object);
- Fingerprint: adopt advanced semiconductor sensor, 360–degree identification Angle. fingerprint collection area wide, high resolution, effectively prevent false fingerprint; Fingerprint: adopt advanced semiconductor sensor,360–degree identification Angle. fingerprint collection area wide, high resolution, effectively prevent false fingerprint,
- Ppassword: the use of fashionable and advanced touch–screen key technology, can be in the correct password before and after the addition of 12 irrelevant password effectively prevent the embarrassment of many people when entering the password.
- Double authentication mode: fingerprint, password and card can be set in pairs to unlock the door. After setting, only two users can open the door after simultaneous verification. suitable for special occasions;
- User management: The administrator has the highest authority (ordinary users can only open and close the door operation), the lock can be set for editing, the number of administrators is 9 (fingerprint, password, card), the total capacity of 300;
- Alarm function: the machine has anti–warping alarm, low–voltage alarm, trial–and–error alarm;
- Standby power supply: When the battery is exhausted, 5V mobile power can be used to supplyemergency power to the door lock;

3、Matters need attention:

- After the new lock is installed, the initialization operation should be resumed and the fingerprint recorded duringinstallation and debugging should be cleared;
- Handle is the key part to open and close the door, its flexibility directly affects the use of the door lock,so do not put the obiect again:
- During fingerprint collection, the finger strength should be moderate. Do not exert any pressure to prevent scratches on the head of fingerprint collection;
- The battery life should not be too long, it is generally recommended to charge at least once a year for 3 months, otherwise the battery leakage will damage the smart lock;
- This lock USES 8.4V high–performance lithium battery. When the first prompt "low power, please replace the battery" is prompted, the door can be opened about 100 times according to different battery capacities.
- Alarm after input error for 5 times in any mode of fingerprint/card/password, the device will ring alarm sound, and the door lock cannot be used within 90 seconds;

4、Iv. User Guide:

- Initialization operation:

Use the card pin, press the hole in the middle of the lock/lock button on the back panel, and hold it for 5 seconds. The voice prompt "Successful initialization" is "123456". and the projectpassword "123456" can be opened. After entering the administrator information, the project password "123456" will be deleted automatically.

■ Function management (without networking mode)

Under normal conditions
"*" returns health/exit key/delete health
"#" confirm key/enter key/repeat voice broadcast

In the initialization state, press "*+#"

Enter the initialization password “123456”

Add Administrator
Can be used for facial recognition, fingerprints, passwords, IC cards
After successful addition, enter the settings interfaceC cards

1. Door lock settings
2. Wireless settings
3. Installation Settings

■ Add and delete users

Under normal conditions
"*" returns health/exit key/delete health
"#" confirm key/enter key/repeat voice broadcast

Wake up the screen
Press “*+#” enter menu

Enter verification administrator

Press 1: Door Lock Settings

Press "1": Add user information, which can be entered as fingerprint, password or card

After successful operation, Press "*" to return or continue adding regular users

Press "2": Delete user information

Enter the fingerprint password, card or ID of the user to be deleted

After successful operation, Press "*" to return to or continue deleting the user

■ Door lock settings:

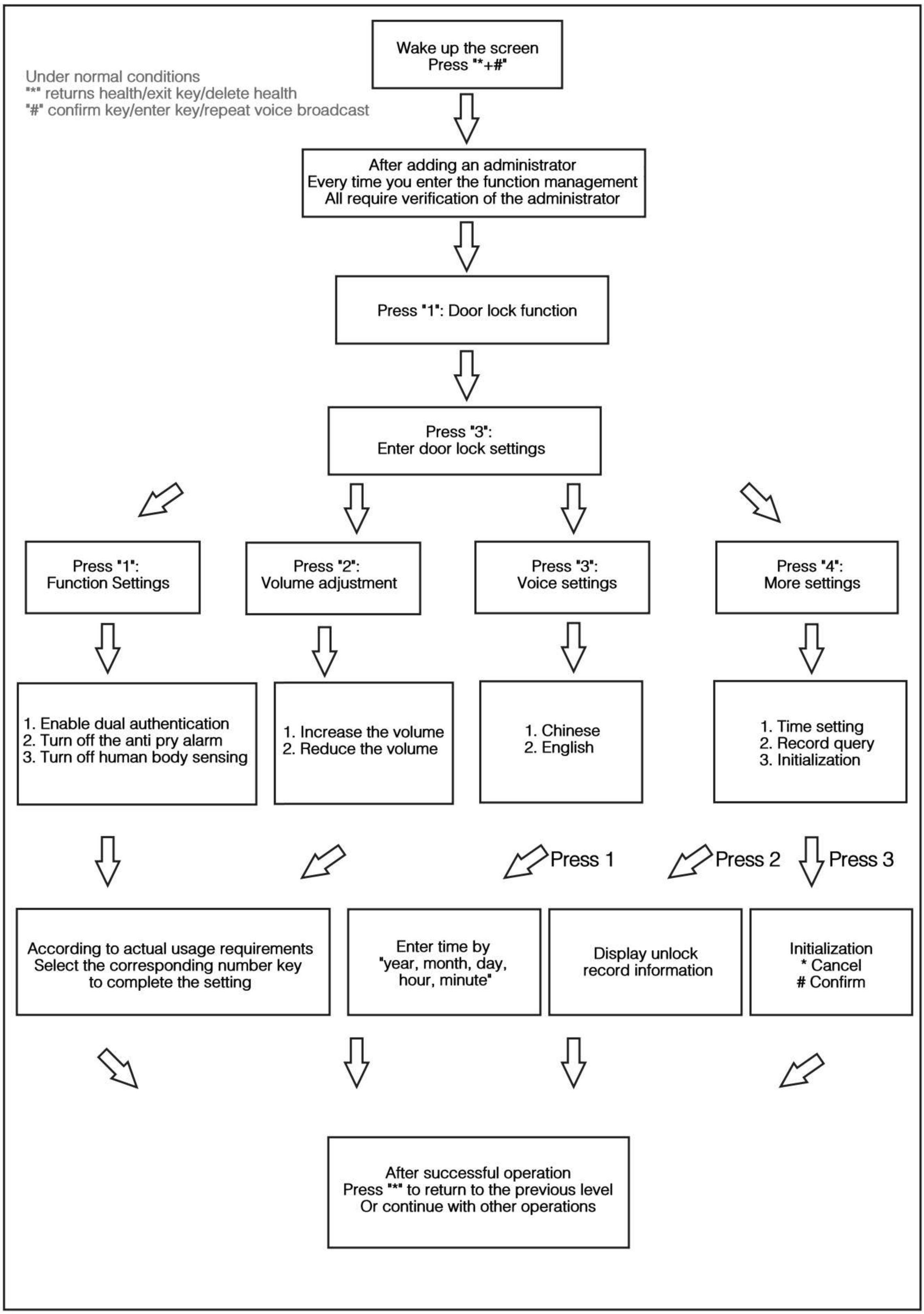

■ Add administrator:

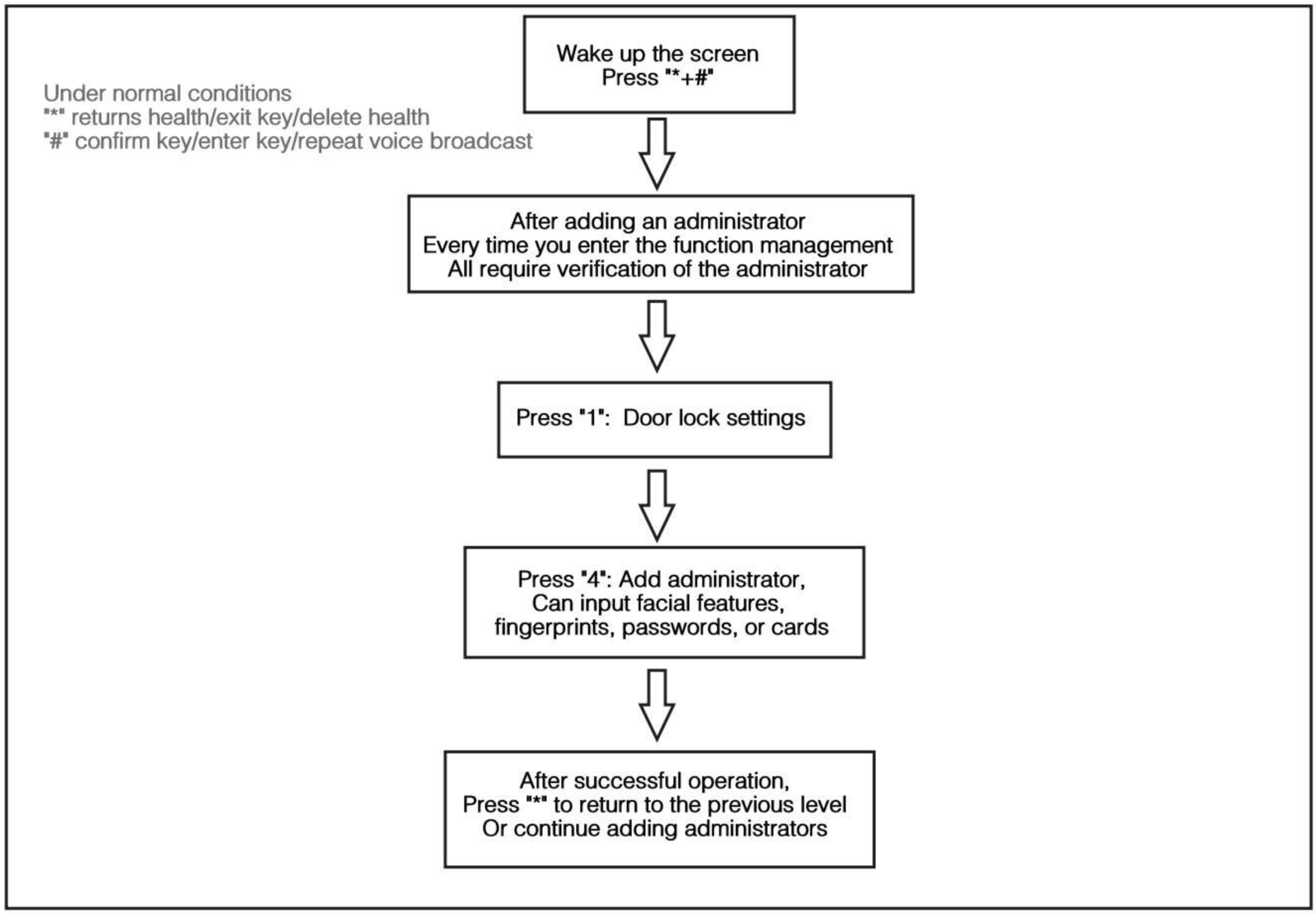

■ Wireless settings:

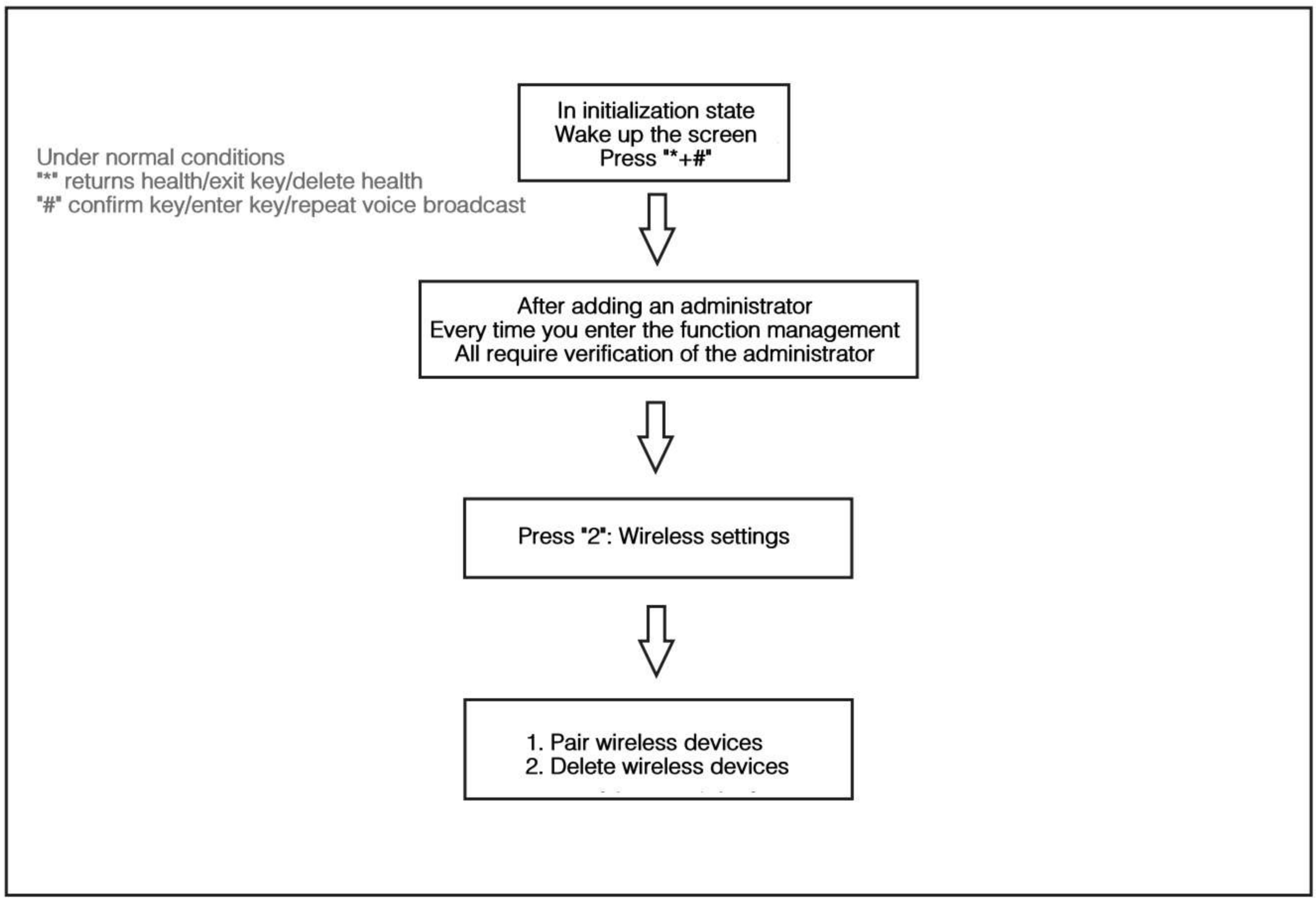

■ Add administrator:

★ Maintain the menu, ★
For installation and debugging personnel to use,
Please operate with caution

Press the * key
Exit the human body scanning state

⇩

In initialization state
Press 888 # or 99988777#

⇩

1. Motor direction	2. Oblique tongue time	3. Lock off waiting time	4. Automatic locking
⇩	⇩	⇩	⇩
1.positive direction 2.opposite direction Select the corresponding motor direction based on the actual opening direction	Lock tongue time can be selected from 1–9 Choose the appropriate time from 1–9 according to actual needs	Please enter the duration, ranging from 2 to 5 seconds	1. Enable automatic locking 2. Turn off automatic locking
	★ When opening the car door, the tilted lock tongue pops up, and the reverse time of the emergency knob can be selected according to the requirements of the lock body. (Note: The reversal time unit is 0.1 seconds, default is 0.3 seconds). The time setting corresponds to a numeric key, for example, press "1" to set the time to 0.1 seconds. Select the desired time from "1–9", which is 0.1 to 0.9 seconds, except for the number "0"	★ The waiting time for closing the lock refers to the waiting time from unlocking until the slanted tongue reverses. The default waiting time is 3 seconds	★ After enabling automatic locking, it will automatically lock 15 seconds after each unlocking

■ Restore factory settings:

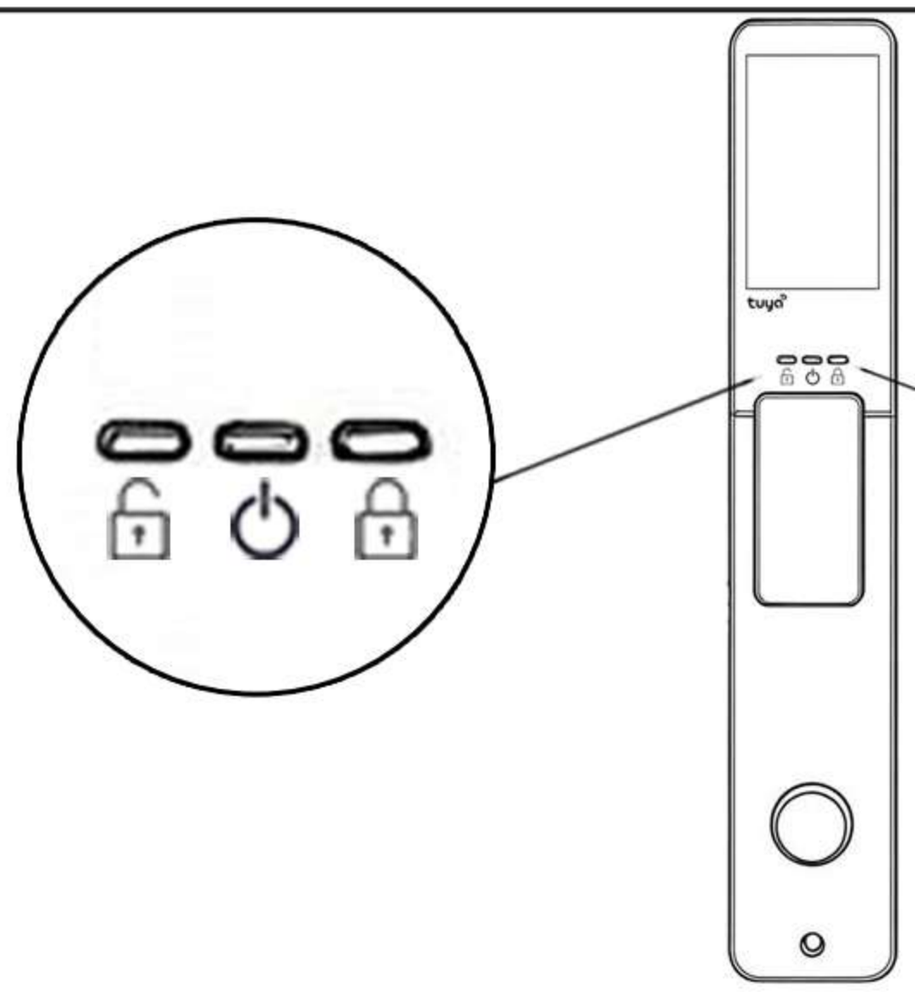

Press and hold the indoor on/off button for 5 seconds.
Voice prompt: Initialization successful.
Release the button after hearing the voice prompt

■ Other instructions:

★ If the wrong password is entered more than 5 times within five minutes, the keyboard is locked for 90 seconds, and the system does not respond to any operation within 90 seconds, the administrator can unlock it by entering the settings key on the back panel;

★ Password anti peeping function: When opening the door, enter the password as follows: XXX password XXX to add some irrelevant codes before and after the password, and then press # to confirm;

★ After the voltage drops below 6.9V, the door lock will automatically sound an alarm every time it is unlocked. After the alarm, the door lock can be unlocked 100 times. If it exceeds the number of times, unlocking will be prohibited. It is necessary to replace the battery with a new one before unlocking

★ Human body sensing, there will be a 10 second delay before restarting after each unlocking to prevent accidental startup when going out;

★ The human body induction automatically triggers 5 times, and if no face is detected or the lock is unlocked after 5 times, the system will temporarily turn off the induction for 2 hours. After 2 hours or the next operation, it can be restored to prevent the door lock from being repeatedly mistakenly awakened and consuming power in situations where people move frequently.

Scan WeChat, mini program opens the door

Note: The door lock system time and administrator password must be set before use.

Instructions

Installation Tutorial

Set Up Tutorial

Doodle APP download installation and door lock distribution network (2.4G)

Sweep

1.Fully automatic lock distribution network mode:
*# Enter the system entry management, press the * key to return, press 1 wireless settings to add distribution network

2.In the semi–automatic network mode:
the door lock needs to record an administrator user. After the APP enters the search page, tap the back lock setting key to add the distribution network.

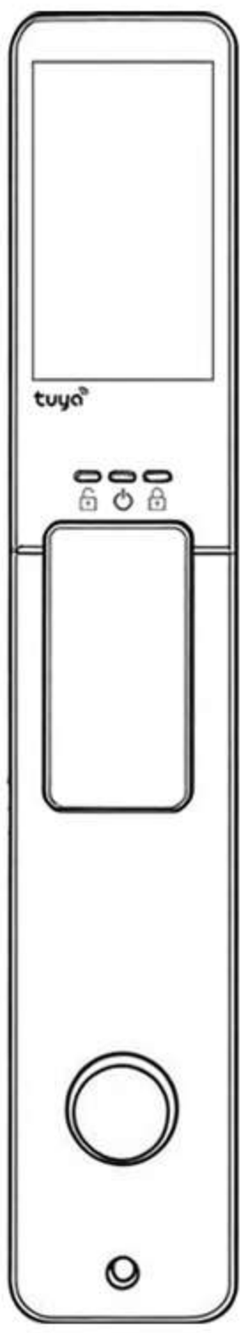

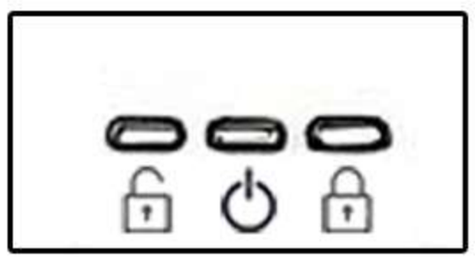

Left: Door opening button
Right: Door closing button

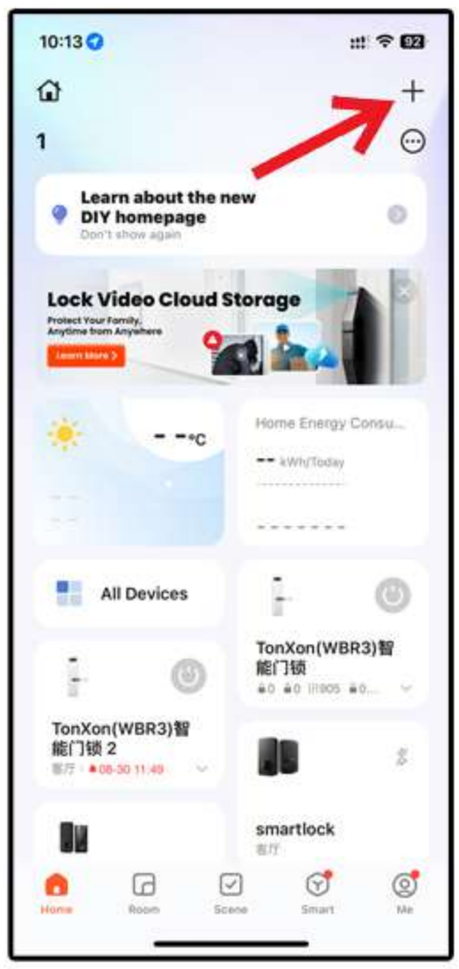

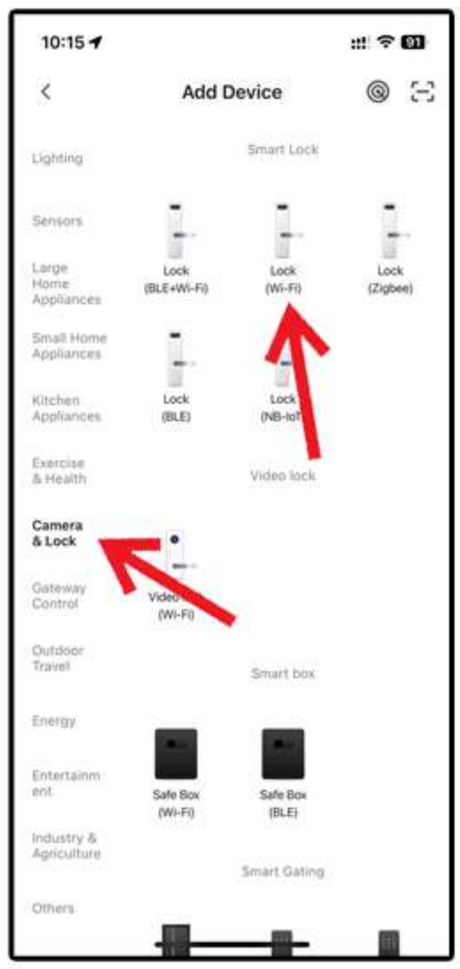







Remarks:
How to use Tuya APP to open the door remotely,
There is a doorbell lock, ringing the doorbell on the lock will send instructions to Tuya APP
There is no doorbell lock, pressing 9# on the lock will send instructions to Tuya APP,
Tuya, after receiving the instruction, the main page will pop up to request remote door opening.Click it to authorize remote door opening.
How to use the temporary password of Tuya APP After the temporary password is generated in the Tuya APP, an instruction is issued. Press 9 # on the lock can be issued,APP pull down refresh display in use, you can use the temporary password

Warranty terms

一、When purchasing this product, please carefully read and understand the following warranty terms to ensure that users can enjoy effective after-sales service.

1. When purchasing this product, please fill out this card carefully and have it stamped and confirmed by the seller.
2. Users are required to properly keep this warranty card and provide it when applying for warranty services.
3. The information filled in this warranty card must be true and accurate, otherwise it is invalid. The product warranty period is one year. During the warranty period, if there is a functional failure due to the product itself, our company.
4. We promise to provide free warranty service. Please contact your local seller to apply for warranty service.

二、The following reasons causing product damage and inability to function properly are not covered by the free warranty.

1. Product damage caused by failure to install and use this product in accordance with the requirements of the User Manual is not covered by the free warranty.
2. Any product damage caused by human factors or accidents is not covered by the free warranty.
3. Products that have been illegally modified or improperly repaired are not covered by the free warranty.
4. Products in use that have naturally formed surface aging, bumps, and scratches are not covered by the free warrantyvice.

三、If the user uses this product outside the warranty period, or if the product is damaged due to human factors, our company will continue to provide after-sales service, but the repair cost will be charged according to the actual situation.

Warranty card

User Profile

Product name	
Product model	
Purchasing date	
Customer Name	

Warranty Record

Warranty Date	Fault and handling methods	Completion date	Customer signature

Customer retention

User Profile

Product name	
Product model	
Purchasing date	
Customer Name	

Warranty Record

Warranty Date	Fault and handling methods	Completion date	Customer signature

Dealer retention