# Smart Card Power Switch User Manual (Tuya Zigbee Hotel Edition)

## 1. Overview

Thank you for purchasing our smart product. Please read this user manual carefully before use and strictly follow the instructions to ensure safe operation. Keep this manual for future reference.

## 2. Product Features

- The product has a simple, elegant design.
- The outer shell is made of 750° high-temperature flame-retardant material. The internal power components adopt a dual-process solder paste and red glue patching technique, ensuring multiple layers of quality assurance.
- Integrated door magnetic linkage corridor light function: the light automatically turns on when the door opens, providing thoughtful human-centered design.

## 3. Product Specifications

| | |
|---|---|
| Product Name | Tuya Zigbee Mesh Card Power Switch |
| Model | HW-INCA-BT2 |
| Max Voltage | 250V~ |
| Input Frequency | 50/60Hz |
| Max Power | 8800W |
| Max Current | 40A |
| Operating Voltage | 220V~ |
| Wireless Frequency | Zigbee Mesh |
| Wireless Standard | Low Power Zigbee 4.2/5.0 |
| Operating Temperature | -20℃~45℃ |
| Operating Humidity | 10%~90% RH (Non-condensing) |
| Storage Temperature | -20℃~+45℃ |
| Storage Humidity | 30%~75% RH |

**Note:** When operating under continuous high loads, the recommended maximum power is 5000W and the maximum current is 23A.

# 4. Wiring Diagram

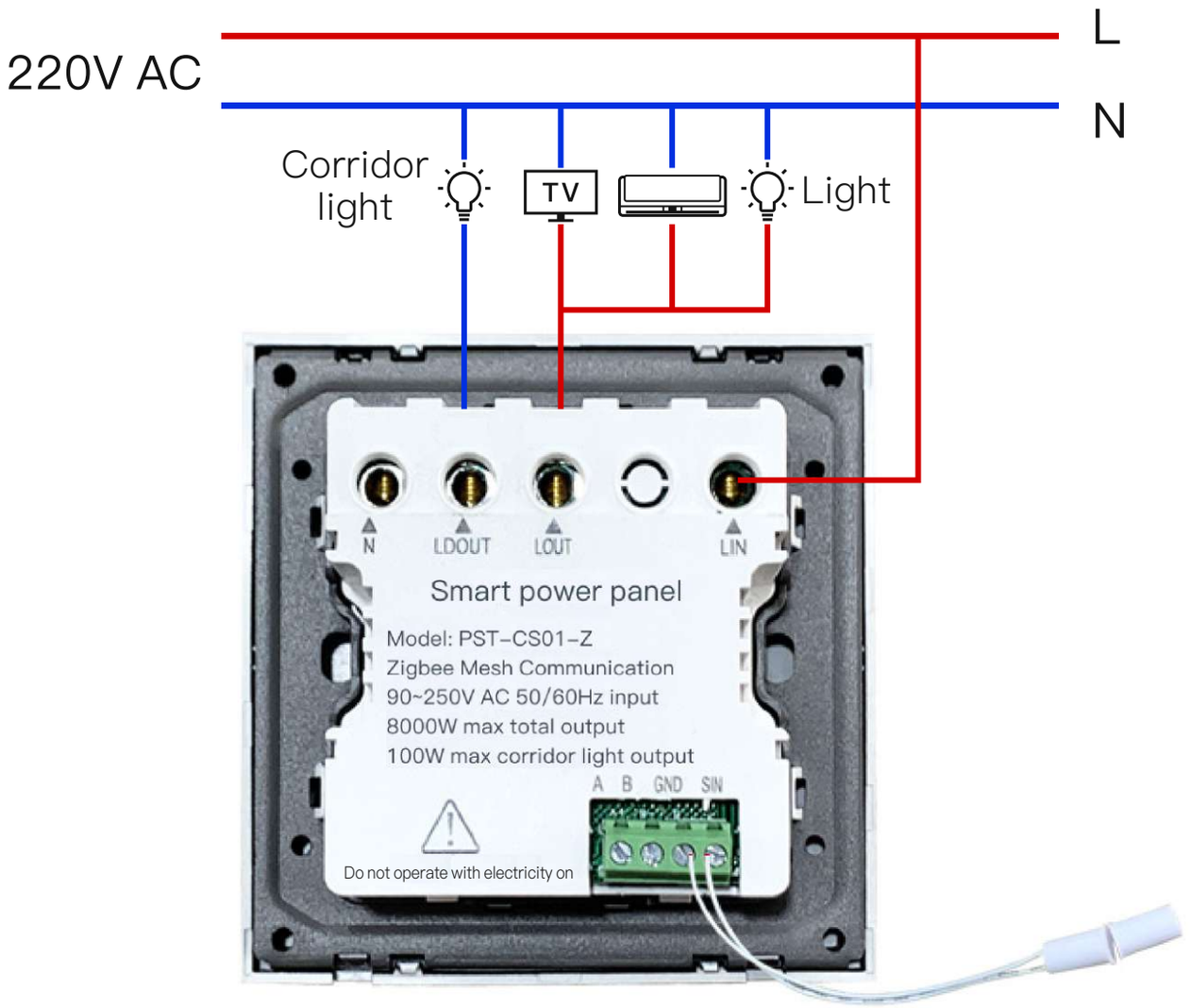


Wired door magnet
(commonly used for open and closed)

## Card Power Extraction Precautions

When installing the card power switch, if its output is connected to an AC contactor, be sure to install an electronic arc suppressor on the contactor. Frequent switching of the AC contactor can generate arcs, which may damage the switch components. The electronic arc suppressor effectively suppresses arcs, ensuring the safe and stable operation of the switch.

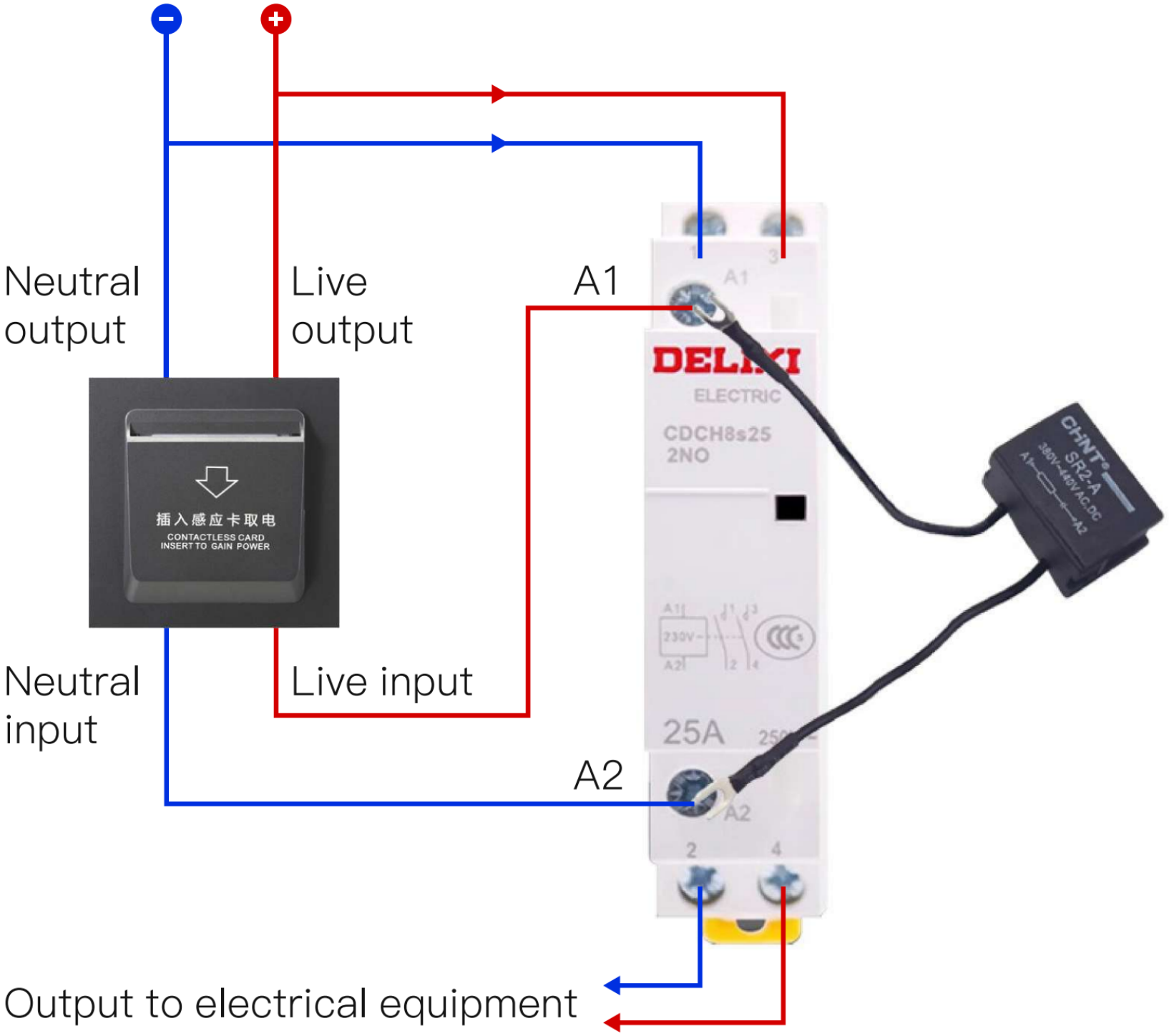


## 5. Product Indicator Explanation

The blue indicator light means the device is in an unconfigured network state. Once configured, the indicator will automatically turn off.

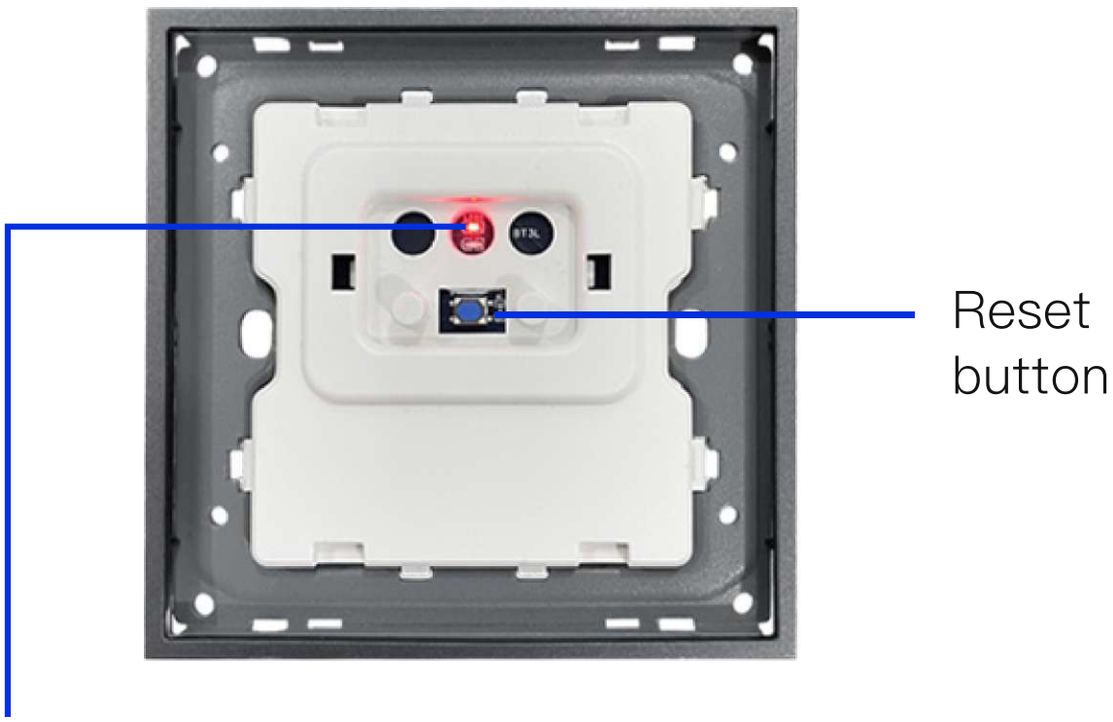


The red indicator light turns off when a card is detected and turns on when no card is detected.

## 6. Network Configuration Preparation

A. When powered on for the first time, the device automatically enters pairing mode.

B. To reset, quickly press the reset button three times. The indicator light will start flashing.
C. Once the indicator turns off, it will flash again.
D. When the indicator flashes again, press the reset button three times to restart the pairing process.

## 7. Zigbee Network Configuration

A. Enable Zigbee on your mobile device, download and open the Tuya Smart App, then tap“Add Device.”

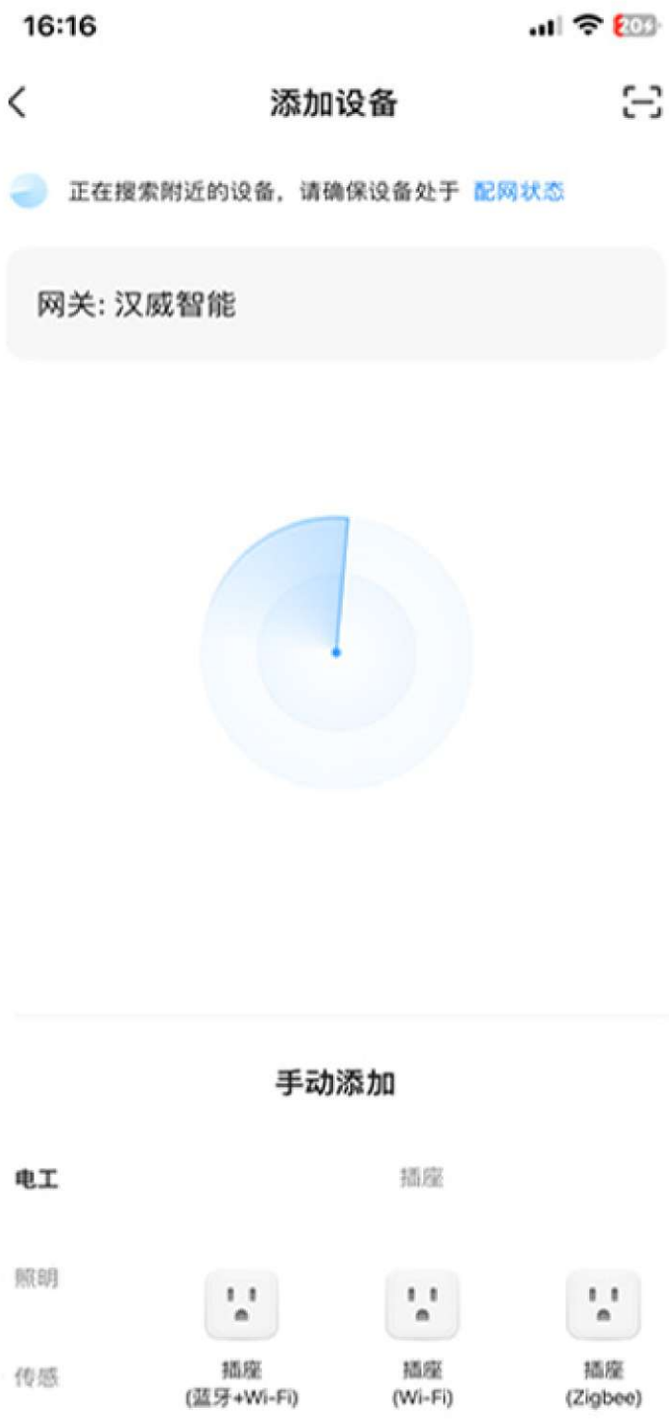

B. Wait for the device to be detected and tap “Add.”

C. Wait patiently for the device to be added.

D. After network configuration, the device is ready for use.

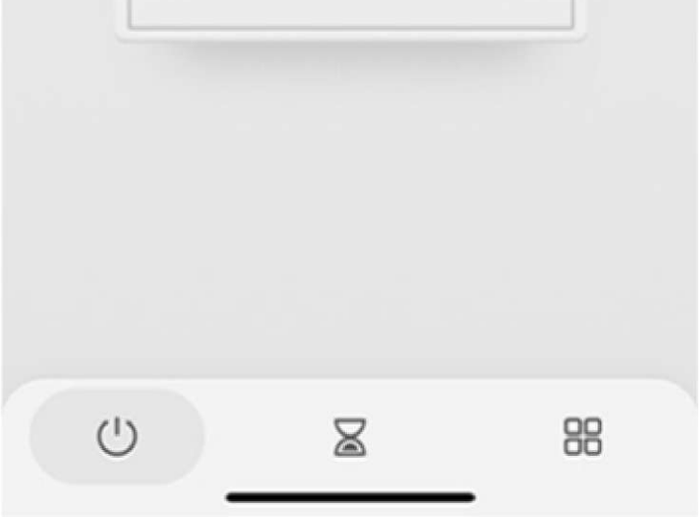

## 8. Hotel Engineering App Setup

A. Download and open the Hotel Engineering App, select your project, and start network pairing.

B. Wait for the device to be detected and tap “Add.”

C. Wait for the network configuration process to complete.

D. Once completed, the card power switch is successfully paired.

**Note:** Supported card types: Mifare1, S50, S70, ISO14443A
NFC Frequency: 13.5MHz

# 9. Non–Warranty Conditions

The product is not covered under warranty if:

A. Unauthorized repairs, misuse, collision, neglect, abuse, liquid damage, or accidents occur.
B. The product has been modified, incorrect accessories were used, or warranty labels were removed or altered.
C. The product is beyond its warranty period.
D. Damage is caused by force majeure.
E. The issue does not meet the conditions listed in the Product Performance Failure Table.

## Product Performance Failure Table

| Product | Performance Failure |
| --- | --- |
| Hanwei Card Power Switch | 1. Device does not power on after connection<br>2. Indicator light is non–functional<br>3. Unable to connect to network<br>4. Hardware failure causing function loss |

**Note:** The product images, accessories, and user interface screenshots in this manual are for reference only. Since the product is continuously updated and upgraded, the actual product may differ slightly in appearance and details. Please refer to the actual product you receive.