Fusion Series Enclosure(E2GS/EDIM)—Operation Guide

Introduction

The SONOFF Wall Switch Enclosure is custom-designed for the accompanying SONOFF Retrofit Module, serving as a physical switch for the retrofit module. Its mini rear structure not only allows perfect compatibility with 86-type junction boxes and 60mm diameter European standard round junction boxes, but also adapts to most shallow junction boxes on the market, easily solving the space limitations often encountered with traditional retrofit module installations.

Product Name	SONOFF Smart 2-Gang Wall Switch Enclosure
Product Model	E2GS
Product Photo	
Compatible SONOFF Retrofit Module	MINI-2GS/MINI-ZB2GS/MINI-ZB2GS-L

Product Name	SONOFF Smart Dimmer Wall Switch Enclosure
Product Model	EDIM

Product Photo	
Compatible SONOFF Retrofit Module	MINI-DIM/MINI-ZBDIM

Highlights

- **Made of PC Material:**

Fireproof, scratch-resistant, and durable without deformation over time.

- **Clip-on Installation Design:**

The innovative clip-on design greatly simplifies the wiring process. It is firmly fixed in place, reducing installation time, minimizing errors, and enhancing the overall user experience.

- **Ultra-Slim Design:**

The maximum thickness is less than 23mm and is fully compatible with 86-Type junction boxes and standard EU round-junction boxes.

- **Micro-arc Button Design:**

Better aligned with the user's pressing angle, providing precise and effortless tactile feedback.

Specification

2-Gang Wall Switch Enclosure

Model	E2GS
Weight(Include Package)	90g
Dimension	86 x 86 x 34 mm
Color	White
Casing material	PC
Dimmer Wall Switch Enclosure	
Model	EDIM
Weight(Include Package)	58.6g
Dimension	86 x 86 x 35.8 mm
Color	White
Casing material	PC

Usage Method

Power Off

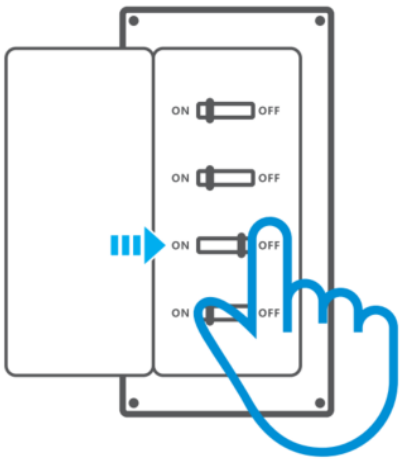

Device Assembly

Use a screwdriver to loosen the screws at the device's wiring terminal and follow the instructions in the image above to install the device onto the back bracket of the Wall Switch Enclosure.

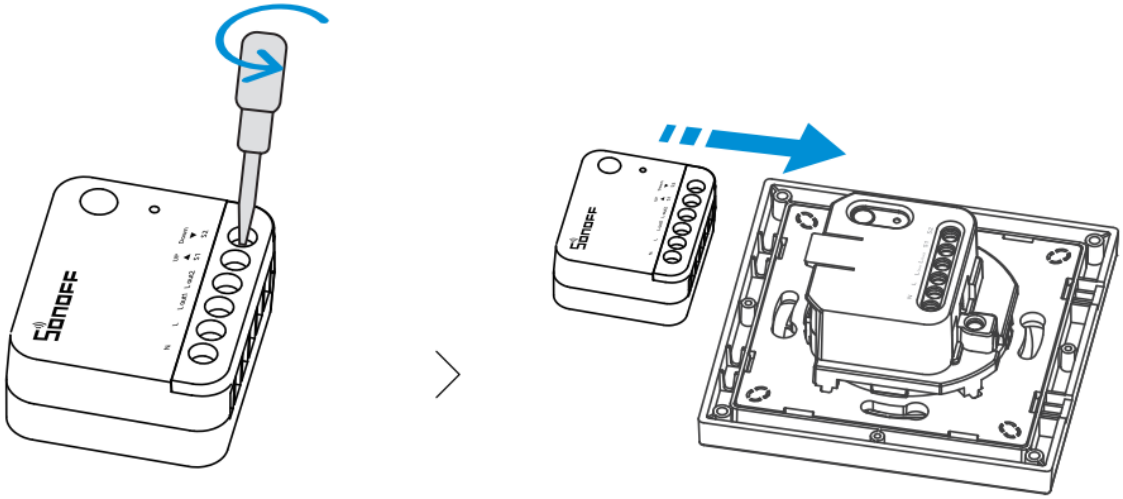

Wiring Instruction

E2GS & MINI-2GS/MINI-ZB2GS

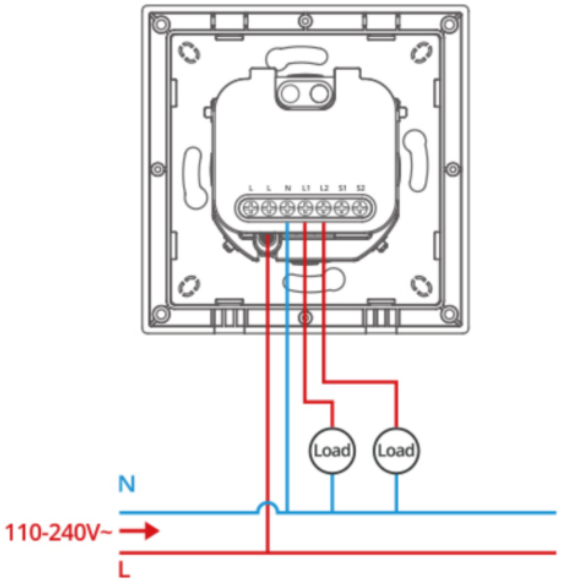

E2GS & MINI-ZB2GS-L

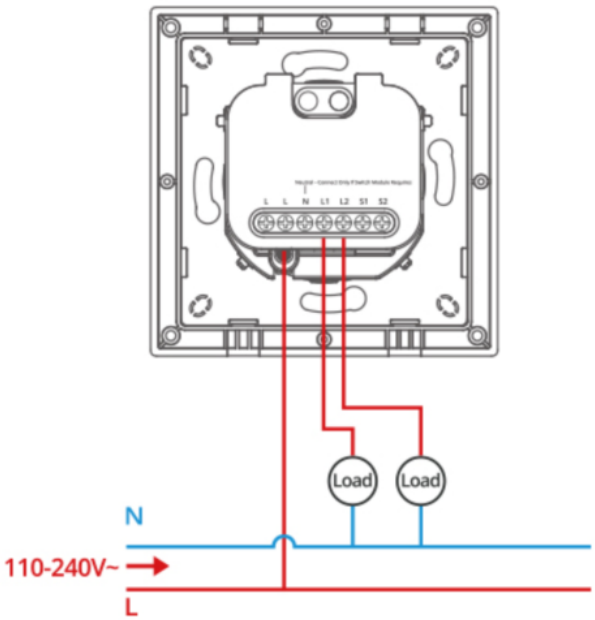

EDIM & MINI-DIM / MINI-ZBDIM

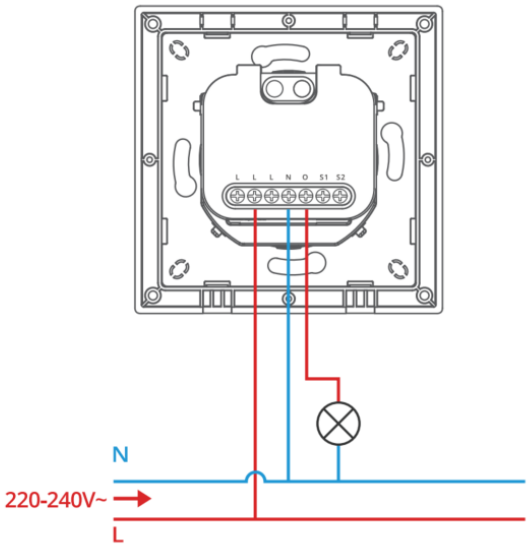

Make sure the wiring is correct, then tighten the screws on the device's terminal block.

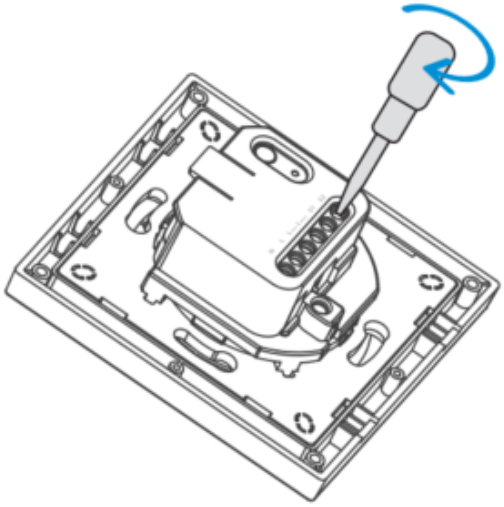
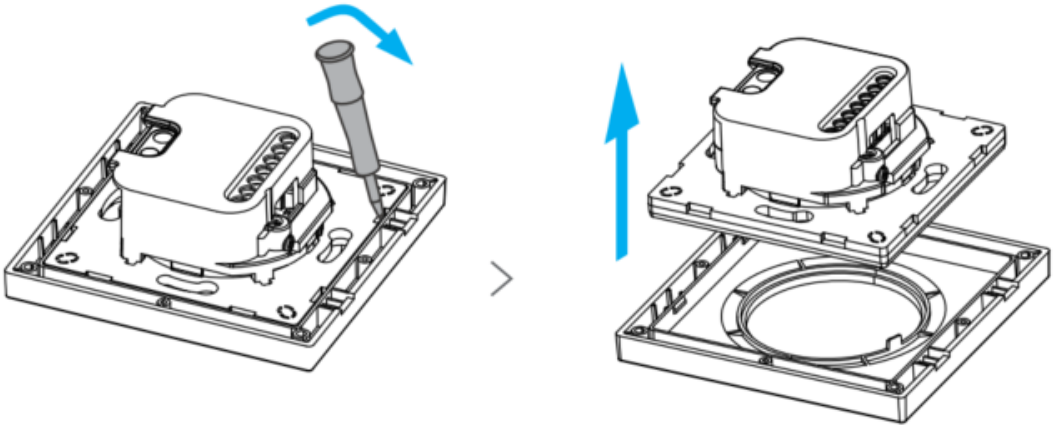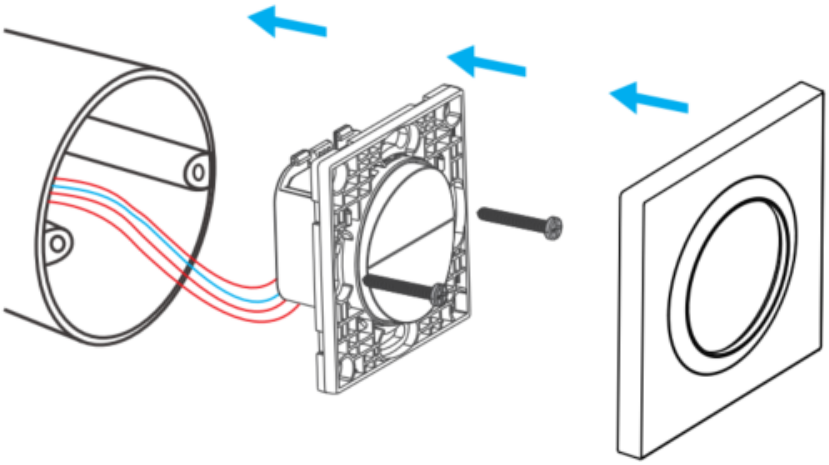
Install the device into the mounting box