User Manual CAM-C44HE (EN)

Introduction

Instruction of LED Indicator Status

Audio Alerts

Compatible Voice Assistants

Specifications

Download the eWeLink App

Power on

Add Device

Add Zigbee Sub-devices

Installation

Waterproof the Power Port

Waterproof the Ethernet Port

- When using with an Ethernet cable
- When using without an Ethernet cable

WARNING

EU Declaration of Conformity

For CE Frequency:

FCC compliance statement

WEEE Disposal and Recycling Information

ITEAD - 李梓旋(42604830)



Outdoor Smart Security Camera

User Manual V1.0

Introduction

The CAM-C44HE is a high-performance outdoor surveillance camera that combines dual-lens monitoring with a built-in smart gateway. Equipped with two 4MP HD lenses, it can monitor two areas simultaneously, and with its pan-tilt mechanism, it delivers truly zero-blind-spot coverage.

Beyond core surveillance, the camera features a built-in ZigBee gateway that seamlessly connects to various ZigBee devices such as door/window sensors and water valves, creating an integrated outdoor smart security ecosystem that bridges monitoring with automated actions.

Rated IP65 for waterproof and dustproof protection, the CAM-C44HE reliably operates in challenging outdoor conditions — including rain, dust, high heat, and freezing cold — ensuring stable 24/7 performance for round-the-clock security.



Dual 4MP Wide–Angle Lenses



360° Pan & Tilt Coverage



IP65 Weatherproof



Built–In Zigbee Hub



Ethernet & Dual Band Wi–Fi



AI Human, Vehicle & PetDetection

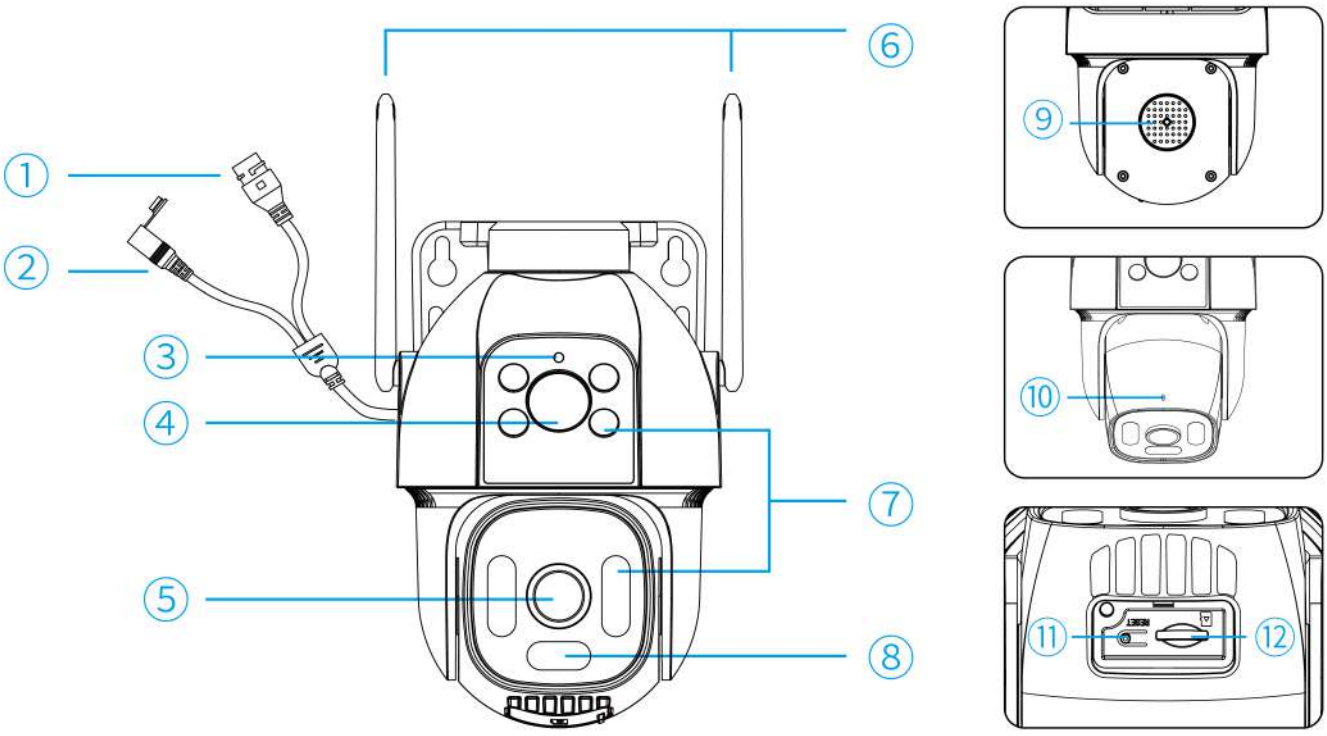

① Ethernet port	⑦ Fill light
② Power port	⑧ Alarm Indicator Light
③ LED indicator	⑨ Speaker
④ Fixed camera lens	⑩ Microphone

⑤ PTZ camera lens	⑪ Reset button • Press and hold for 5 seconds (the device emits a "beep" sound): Device enters the pairing mode. (Pairing time 30 minutes)
⑥ Antenna	⑫ TF card slot

Instruction of LED Indicator Status

LED indicator status	Status instruction
Flashes two short and one long	Device is in pairing mode (Single press reset button to exit pairing mode).
Keeps on	Device is online.
Keeps off	Device is in sleep mode.
Flashes once, then stays on briefly	Device exits the network configuration state after being offline, network exception, or failure to connect to the network.
Flashes twice rapidly	Device detects TF card (device will emit two "beep" sounds).
Flashes once rapidly	Device being watched

Audio Alerts

Audio Alerts	Device Status
Single "beep" sound (Press and hold reset button for 5 seconds)	Device is in pairing mode.
Double "beep beep" sounds	Device detects TF card.

Compatible Voice Assistants

works with Google Home

works with alexa

Specifications

CAM Outdoor DUO	
Product Series	CAM Series
Product Type	Outdoor Smart Security Camera
Product Model	CAM-C44HE
Input	12V ⎓ 1A
Resolution	4MP+4MP
Rotation Angle	Horizontal 260°, Vertical 90°
Video Compression Standard	HD：H.265，SD：H.264
Field of View	108°
Storage Methods	TF card (up to 512GB)
Network Interface	RJ45 (10/100Mbps)
Wireless Connection	Wi-Fi：IEEE 802.11a/b/g/n/ac/ax 2.4GHz & 5GHz Zigbee 3.0
Net Weight	547g （without accessories）
Product Dimension	130mm×179mm×167mm
Colour	White
Casing Materials	ABS+PC
Applicable Place	Outdoor
Working Temperature	-20℃～50℃
Working Humidity	5%~95% RH，non-condensing

Waterproof	IP65
FCC ID	2APN5-CAMC44HE
Certification	CE/FCC/RoHS

Download the eWeLink App

Please download the "**eWeLink**" App from the **Google Play Store** or **Apple App Store**.



Power on

After powering on, the device will enter the Pairing Mode during the first use. The LED indicator changes in a cycle of two short and one long flash.

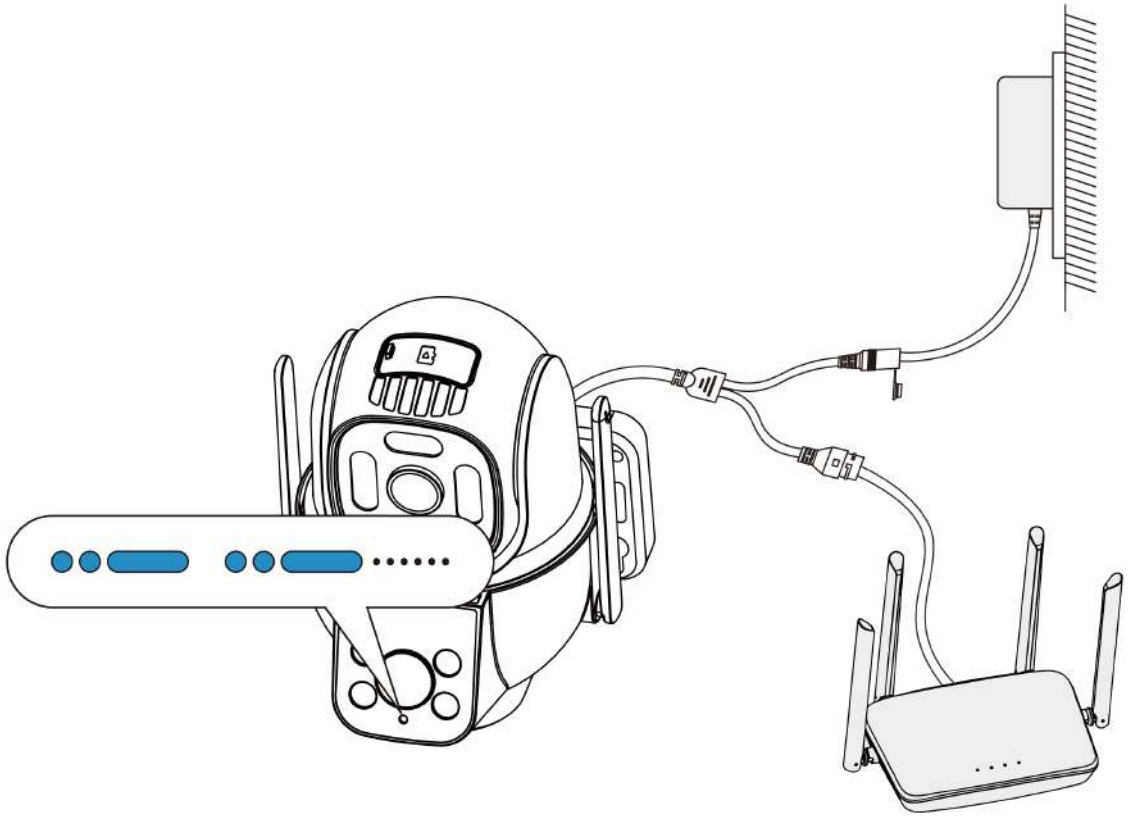

The device will exit the Pairing Mode if not paired within 30 minutes . If you want to enter this mode, please long press button for about 5 seconds until the LED indicator changes in a cycle of two short and one long flash.

Add Device

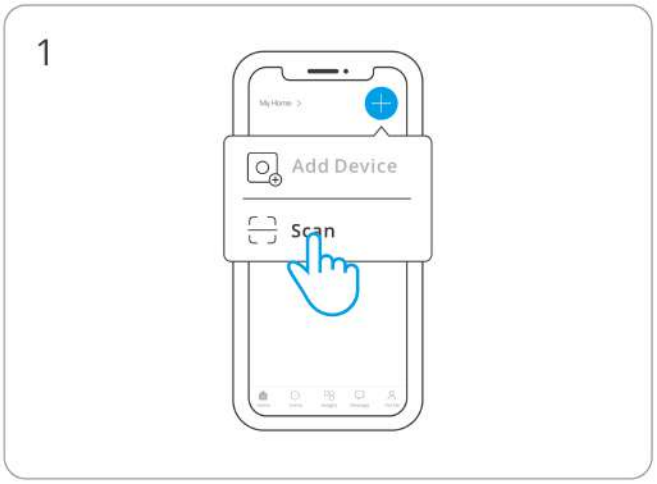

Enter "Scan"

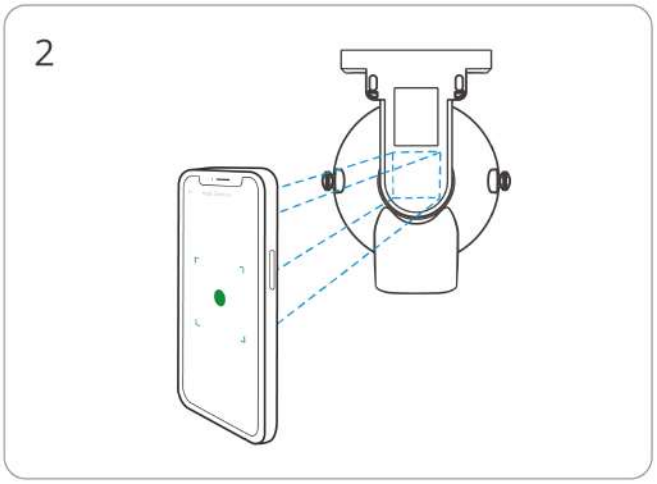

Scan the QR code on the quick guide or the device



Select "Add Device"

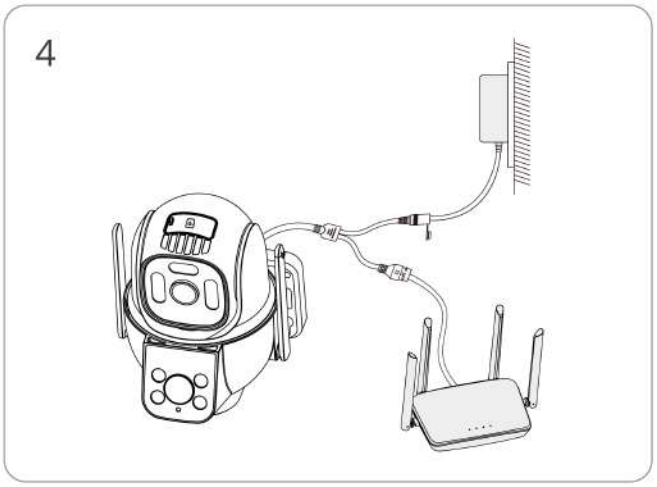

Connect an Ethernet cable to the device (optional)

ITEAD - 李梓旋(42604830)

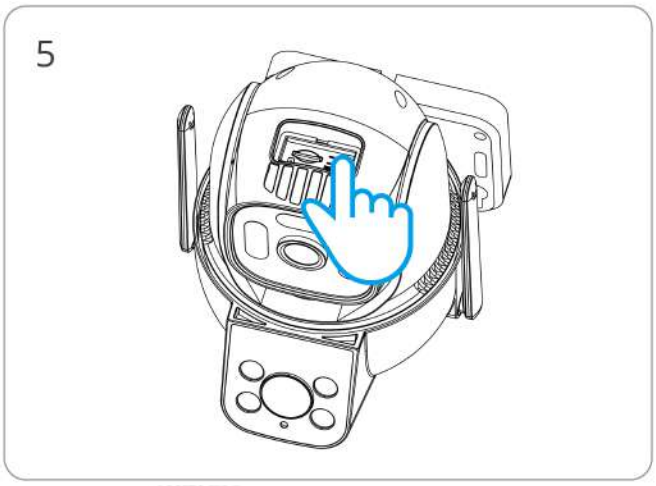

Long press the button for 5 seconds

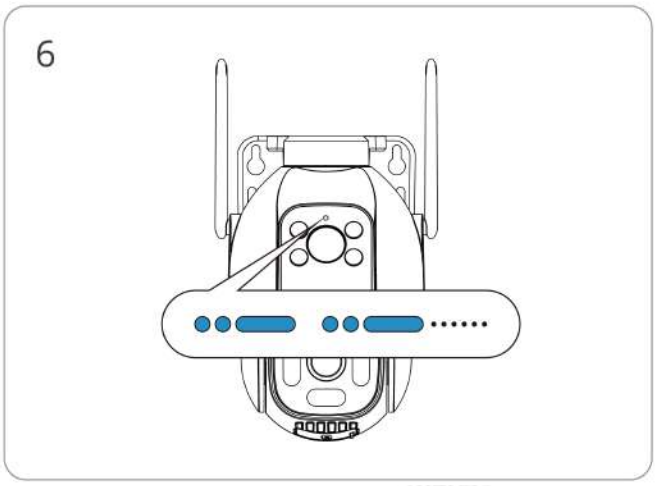

Check LED indicator flashing status (Two short and one long)

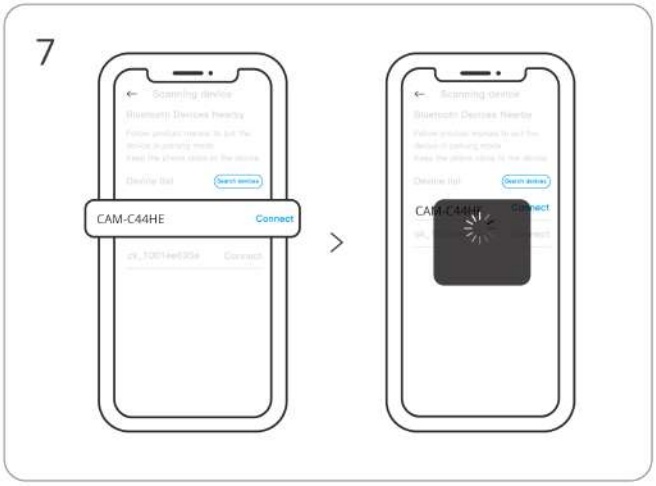

Search for the device and start connecting

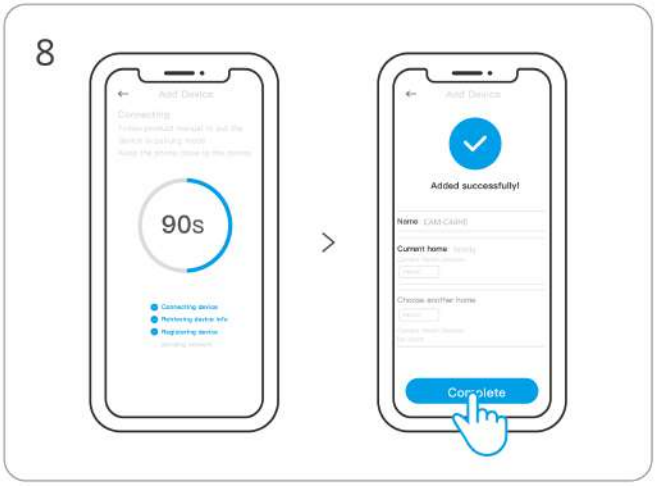

Device "Added completely"

*When configuring via Ethernet, ensure your phone is connected to the same local network (LAN) as the camera.

Add Zigbee Sub-devices

First, put the Zigbee sub-device into Pairing mode, then click on "+ Add Device" on the gateway interface, and wait for the search to complete to add the sub-device.

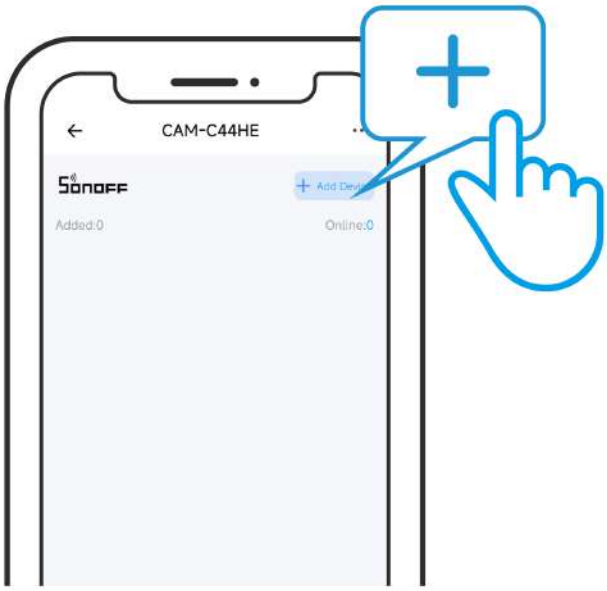

*CAM-C44HE only supports adding SONOFF and eWeLink ecosystem Zigbee sub-devices.Please refer to ***SONOFF Help Center*** for supported sub-devices list.

Installation

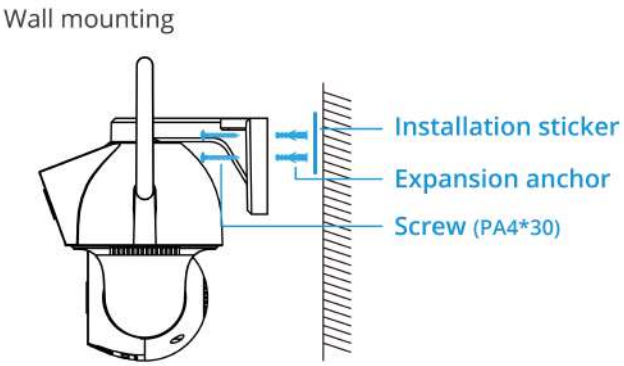

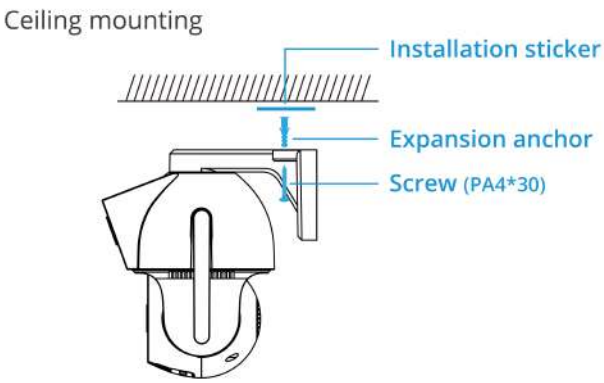

1. Attach the installation sticker to the desired mounting position.
2. Drill holes and insert the expansion anchors (not required for wooden surfaces).
3. Secure the device with screws.

Waterproof the Power Port

If the device's power port is exposed outdoors, ensure the connector is tightly secured to prevent water ingress.

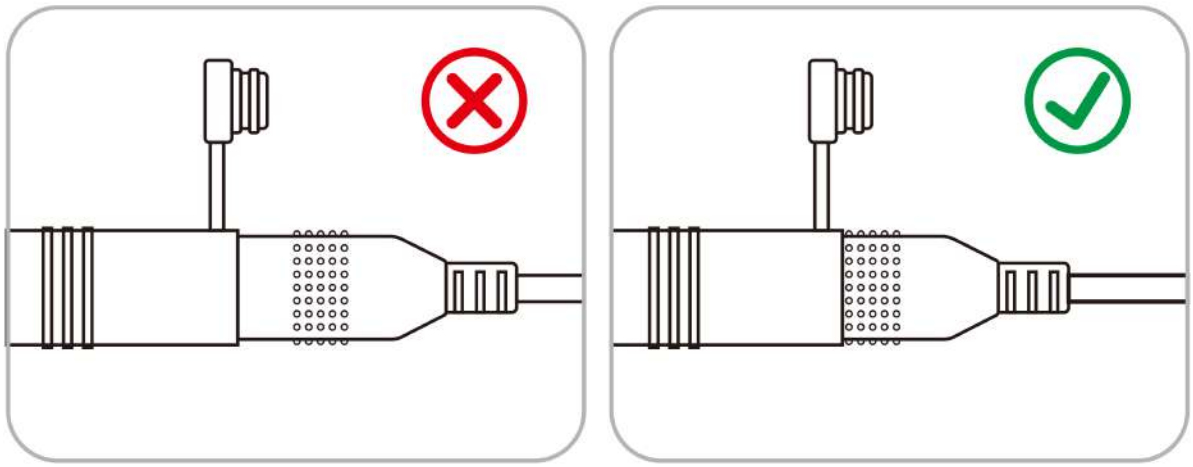

Waterproof the Ethernet Port

If the device's network port is exposed outdoors, install a waterproof cover to prevent water ingress.

When using with an Ethernet cable

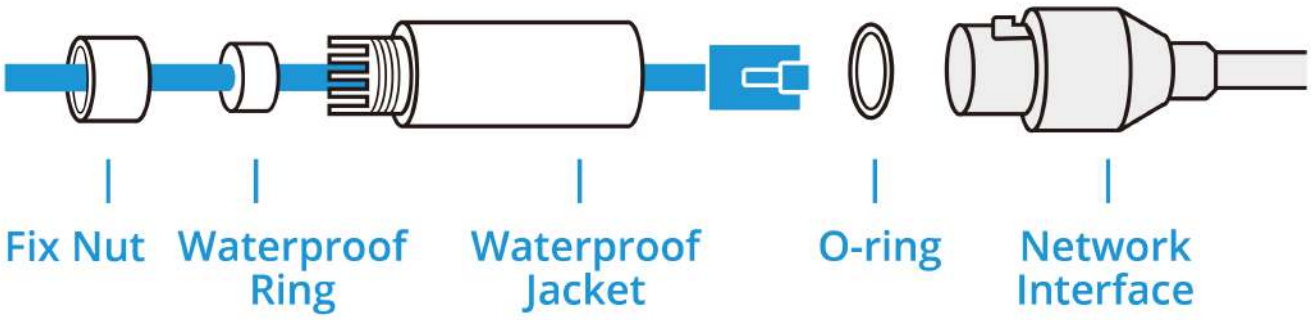

1. Route the network cable through the following components in order: fix nut, waterproof ring, and then the waterproof jacket.
2. Insert the waterproof ring into the waterproof jacket.
3. Fix the O-ring to the network interface of the camera and connect the network cable.
4. Attach the network interface with the waterproof jacket, then twist to lock.
5. Rotate the fix nut to secure it to the waterproof jacket.

When using without an Ethernet cable

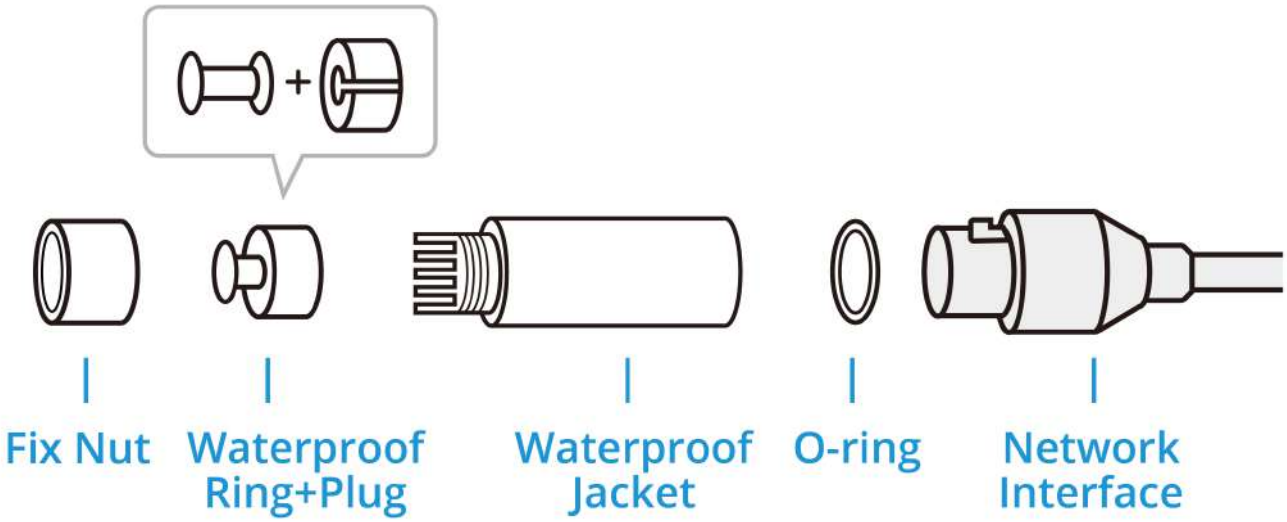

1. Insert the waterproof plug into the waterproof ring, then insert them into the waterproof jacket.
2. Fix the O-ring to the network interface of the camera. Attach the network interface with the waterproof jacket, then twist to lock.
3. Rotate the fix nut to secure it to the waterproof jacket.

WARNING

· This product is not a toy and not intended for use by children. For adult use only.

· The appliance is suitable for moderate climates only.

· The ventilation must not be impaired by covering the appliance with items such as newspapers, table cloths, curtains, etc.

· Naked flame sources, such as candles, must not be placed on the appliance.

· Adapter should be used indoors where the ambient temperature is lower than or equal to 40°C.

Scatola	Manuale	Pellicola	Borsa
PAP 20	PAP 22	PET 1	CPE 7
Carta	Carta	Plastica	Plastica
RACCOLTA DIFFERENZIATA			

Verifica le disposizioni del tuo Comune.

Separa le componenti e conferiscile in modo corretto.

EU Declaration of Conformity

Hereby, Shenzhen Sonoff Technologies Co., Ltd declares that the radio equipment type CAM-C44HE is in compliance with Directive 2014/53/EU. The full text of the EU declaration of conformity is available at the following internet address:

https://sonoff.tech/compliance/

For CE Frequency:

EU Operating Frequency Range:

Wi-Fi: 802.11 b/g/n20/ax20 2412-2472 MHz, 802.11 n40/ax40 2422-2462 MHz

802.11 a/n/ac/ax 5150-5250 MHz, 5725-5850 MHz

BLE: 2402-2480 MHz

Zigbee: 2405-2480 MHz

EU Output Power:

Wi-Fi 2.4G≤20dBm

Zigbee ≤10dBm

BLE≤10dBm

Wi-Fi 5150-5250MHz＜23dBm

Wi-Fi 5725-5850MHz＜14dBm

For 5150-5250Mhz: Inside buildings only. Installations and use inside road vehicles and train carriages are not permitted. Limited outdoor use: If used outdoors, equipment shall not be attached to a fixed installation or to the external body of road vehicles, a fixed infrastructure or a fixed outdoor antenna.

Under normal use of condition, this equipment should be kept a separation distance of at least 20 cm between the antenna and the body of the user.

FCC compliance statement

Responsible Party Name: SONOFF TECHNOLOGY LLC

Address: 14777 NE 40th St, Suite 201 Bellevue, WA 98007

Email Address: usres@itead.cc FCC ID: 2APN5–CAMC44HE

1. This device complies with part 15 of the FCC Rules. Operation is subject to the following two conditions:

(1) This device may not cause harmful interference, and

(2) This device must accept any interference received, including interference that may cause undesired operation.

2. Changes or modifications not expressly approved by the party responsible for compliance could void the user's authority to operate the equipment.

Note: This equipment has been tested and found to comply with the limits for a Class B digital device, pursuant to part 15 of the FCC Rules. These limits are designed to provide reasonable protection against harmful interference in a residential installation. This equipment generates, uses and can radiate radio frequency energy and, if not installed and used in accordance with the instructions, may cause harmful interference to radio communications. However, there is no guarantee that interference will not occur in a particular installation. If this equipment does cause harmful interference to radio or television reception, which can be determined by turning the equipment off and on, the user is encouraged to try to correct the interference by one or more of the following measures:

—Reorient or relocate the receiving antenna.

—Increase the separation between the equipment and receiver.

—Connect the equipment into an outlet on a circuit different from that to which the receiver is connected.

—Consult the dealer or an experienced radio/TV technician for help.

FCC Radiation Exposure statement:

This equipment complies with FCC radiation exposure limits set forth for an uncontrolled environment.

This equipment should be installed and operated with minimum distance of 20 cm between the radiator and your body.

This transmitter must not be co-located or operating in conjunction with any other antenna or transmitter.

Adapter:

US	EU	UK
Model: MYX-1201000LUC01 input: 100-240V~50/60Hz 0.4A max ouput: 12V ⎓ 1.0A	Model: MYX-1201000LEC01 input: 100-240V~50/60Hz 0.4A max ouput: 12V ⎓ 1.0A	Model: MYX-1201000LBC01 input: 100-240V~50/60Hz 0.4A max ouput: 12V ⎓ 1.0A

WEEE Disposal and Recycling Information



WEEE Disposal and Recycling Information All products bearing this symbol are waste electrical and electronic equipment (WEEE as in directive 2012/19/EU) which should not be mixed with unsorted household waste. Instead, you should protect human health and the environment by handing over your waste equipment to a designated collection point for the recycling of waste electrical and electronic equipment, appointed by the government or local authorities. Correct disposal and recycling will help prevent potential negative consequences to the environment and human health. Please contact the installer or local authorities for more information about the location as well as terms and conditions of such collection points.

Manufacturer: Shenzhen Sonoff Technologies Co., Ltd.

Address: 3F & 6F, Bldg A, No. 663, Bulong Rd, Shenzhen, Guangdong, 518000, China

Service email: support@itead.cc Website: sonoff.tech

Made in China





