User Manual MINI-1GS (EN)



Matter Over WiFi Smart Switch

User Manual V1.0

Introduction

The **MINI-1GS** is a compact Wi-Fi single-channel smart switch with neutral and live wires required. It can be installed in a wall switch box and supports loads of up to 16A, allowing a conventional switch to be upgraded to a smart switch. It supports **Matter**, **local Web control**, and **local API**, enabling seamless integration with multiple smart home ecosystems for flexible and reliable home automation.



Remote Control



Smart Timer/Delay



Voice Control



Detach Relay Mode

Matter Support

Local Web Control

Local API

Supports loads up to 16A

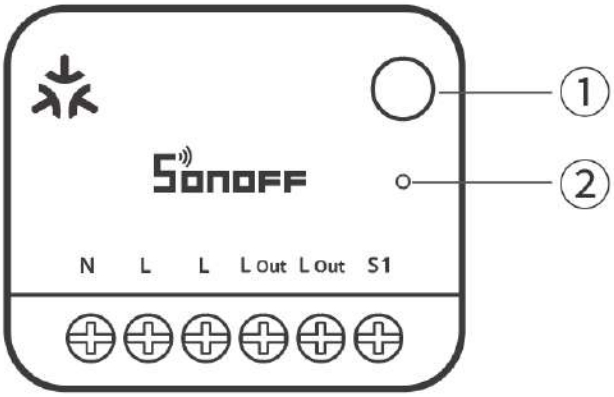

① Button

- Single press: Turn on/off the smart device.
- Press and hold for 5 seconds: The device enters pairing mode while simultaneously enabling the AP hotspot.
- Press and hold for 10 seconds: Factory reset.
- Press three times in succession: Switch the external switch type.

② LED indicator

Blue

- Steady on: Connected to the Internet.
- Flash three times quickly: Switch the external switch trigger type.

Red

- Flashes two short and one long: Device is in pairing mode.
- Keeps on: LAN only.
- Slow flashing: Offline
- Fast flashing: Factory reset.

Platform Certification

works with Google Home

works with alexa

Specification

MINI ONE (Matter Over WiFi)	
Product Series	MINI Extreme Series Gen5
Product Name	Matter Over WiFi Smart Switch
Product Model	MINI-1GS
MCU	ESP32-C6
Rating	16A 100-240V~ 50/60Hz Max Resistive load μ
Max. load	3840W
WiFi	IEEE 802.11 b/g/n/ax 2.4GHz
Net Weight	27.3g
Dimensions	39.5×33×16.8mm
Color	White+Orange
Housing Material	PC
Recommended Wire Gauge	18 AWG to 14 AWG (0.75mm² to 2.5mm²) SOL/STR copper conductor only
Installation Location	Indoor concealed installation
Operating Temperature	10T40 (-10℃~40℃)
Operating Humidity	10% ~ 90% RH, non-condensing
FCC ID	2APN5-MINI1GSP
Certifications	CE/RoHS/FCC

Installation

1. Power Off

ITEAD - 黎业军(2602432)

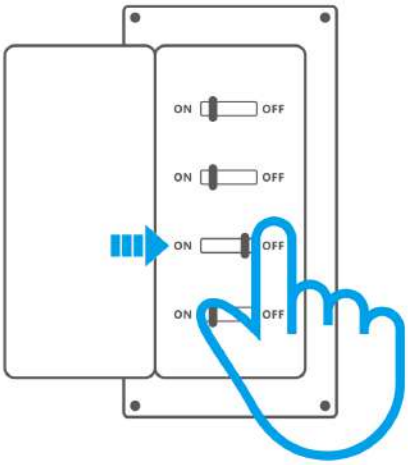

Warnings:

① Installation and troubleshooting must be performed by a qualified electrician. Do not perform wiring or touch terminals while the device is powered on to avoid electric shock!
② To ensure safe electrical installation, a miniature circuit breaker (MCB) or residual current operated circuit breaker (RCBO) rated at 16A and compliant with national safety standards must be installed ahead of the MINI-1GS.
③ For single-phase use only (100-240V~). Connecting to a multi-phase power supply may damage the device.

2. Wiring Instruction

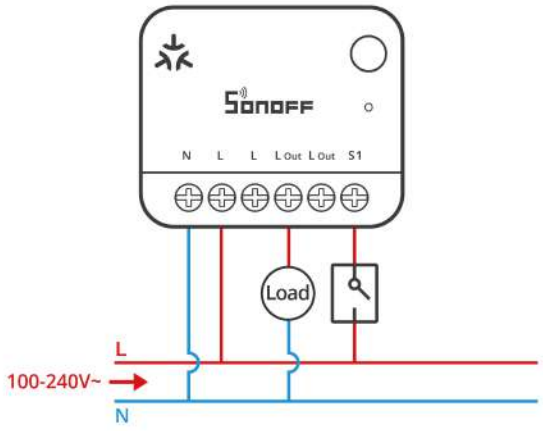

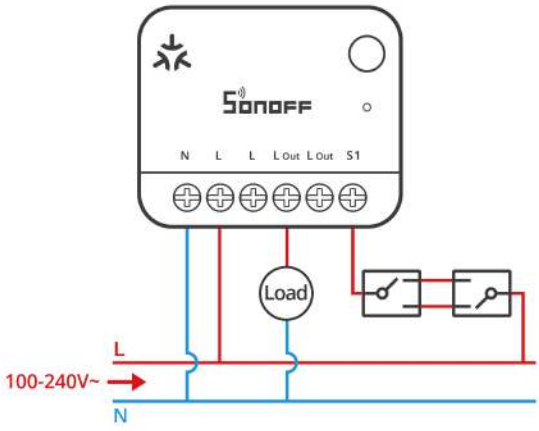

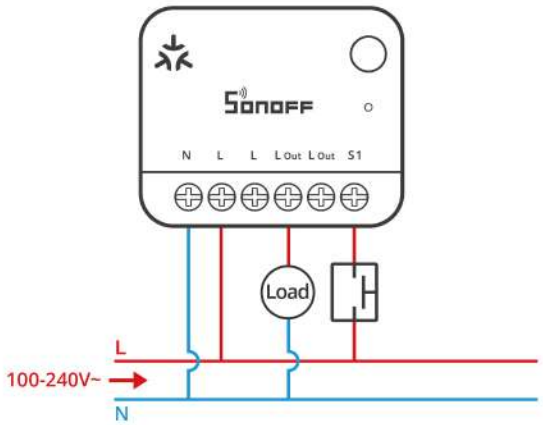

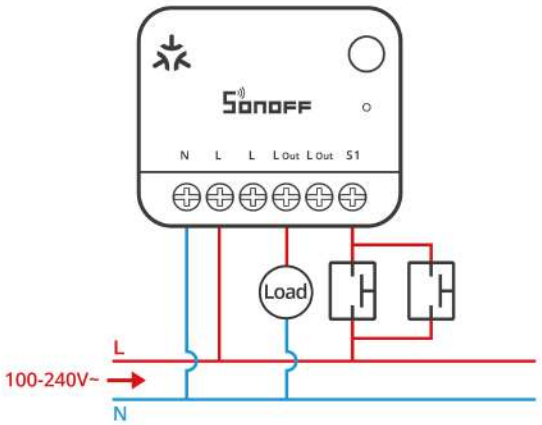

Terminal		Wire	
N	Neutral wire	N	Neutral wire
L	Live wire	L	Live wire (100–240V~)
L	Live wire	L	Live wire (100–240V~)
L Out	Live wire output terminal	Load	The two L Out terminals are internally connected for wiring convenience only and do not increase the rated current capacity.
L Out	Live wire output terminal	Load	
S1	Switch		

ⓘ Do not connect the S1 terminal to the neutral or ground wire, as this may damage the device and cause a hazard.

ⓘ Ensure the wiring is correct.

ⓘ The external switch type supports toggle switches and momentary switches. The default factory setting supports toggle switches.

Switch type switching method: Short-press the button three times until the indicator flashes quickly three times — the switch type has been successfully switched.

3. Power On

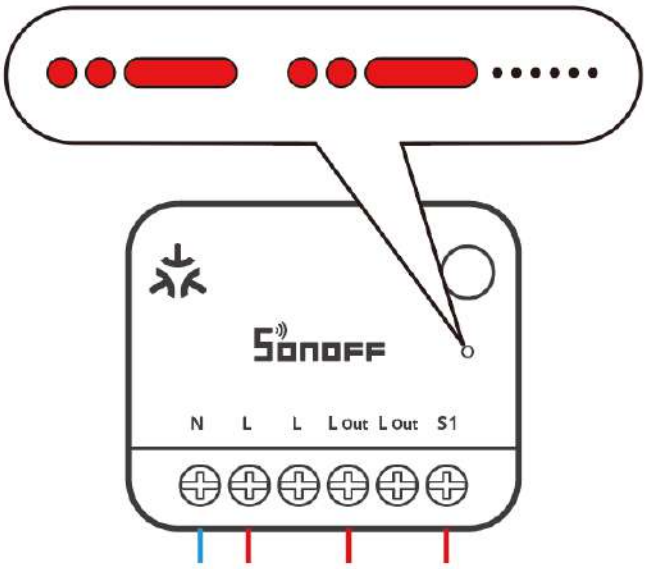

After power-on, the device enters pairing mode by default for first-time use, with the LED indicator flashing in a pattern of "two short and one long".

ⓘ If no pairing is performed within 10 minutes, the device exits pairing mode. To re-enter pairing mode, press and hold the button for 5 seconds until the LED indicator changes in a cycle of two short and one long flash, and release.

Matter Ecosystem User Guide

Open a Matter-compatible App to scan the Matter QR code on the Quick Guide or the device itself to add the device.

Add to Apple via Matter	Add to Google via Matter	Add to Alexa via Matter	Add to SmartThings via Matter	Add to Home Assistant via Matter

eWeLink Ecosystem User Guide

① Download the eWeLink App

Please download the "**eWeLink**" App from **Google Play Store** or **Apple App Store**.



② Add Device



Enter "Scan"

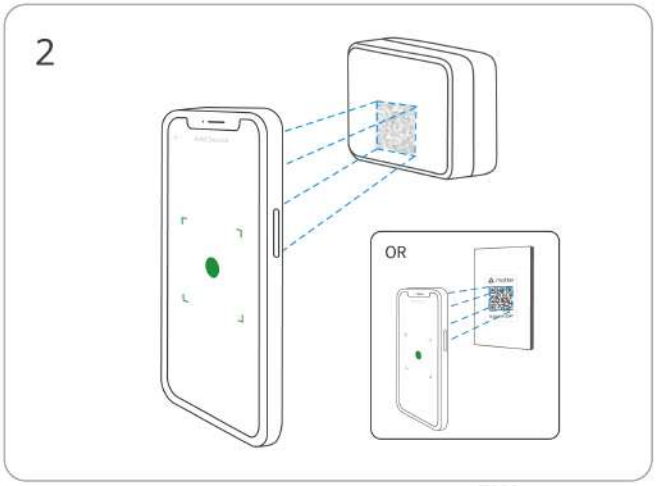

Scan the QR code on the quick guide or the device



Select "Add Device"

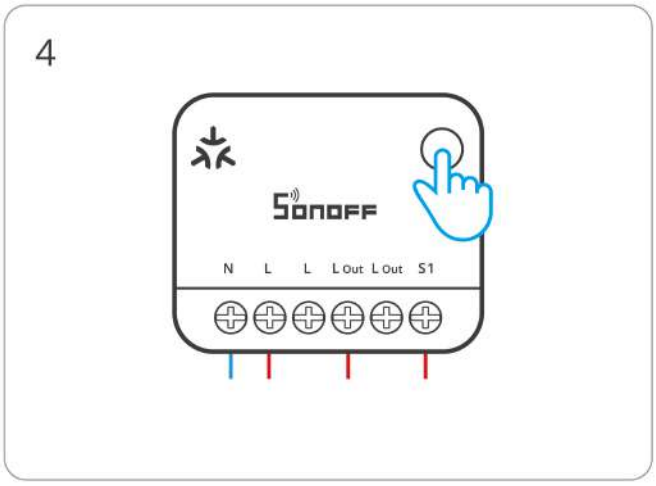

(If the device exits pairing mode)

Long press the button for 5 seconds

ITEAD - 黎业军(2602432)

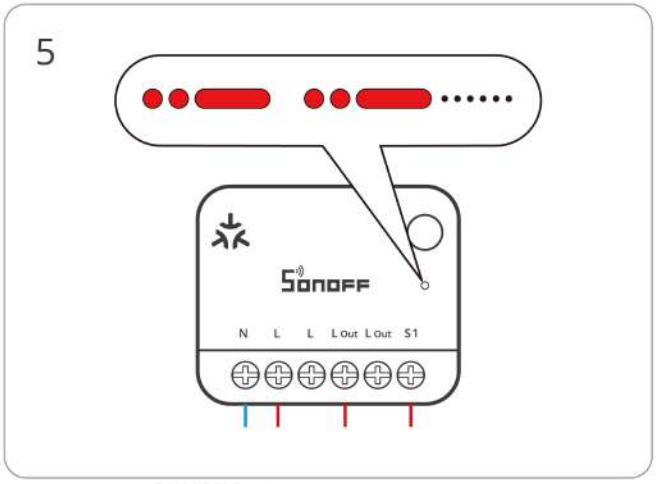

Check LED indicator flashing status

(Two short and one long)

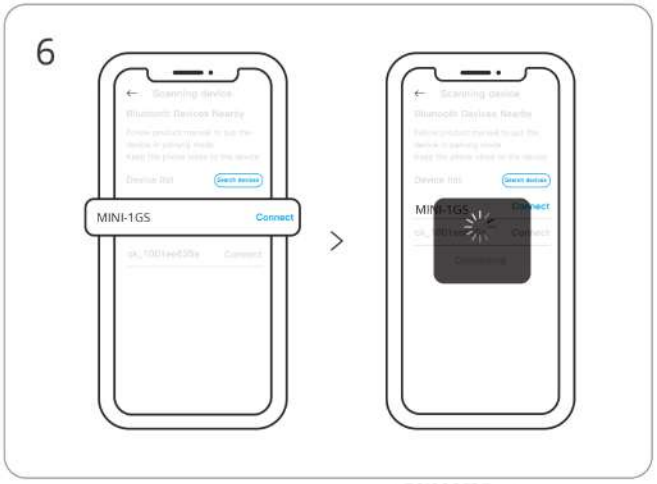

Search for the device and start connecting

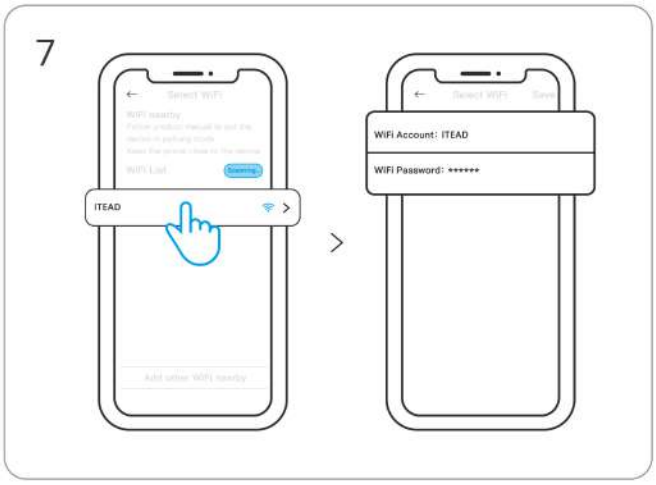

Select the "Wi-Fi" network and enter the password

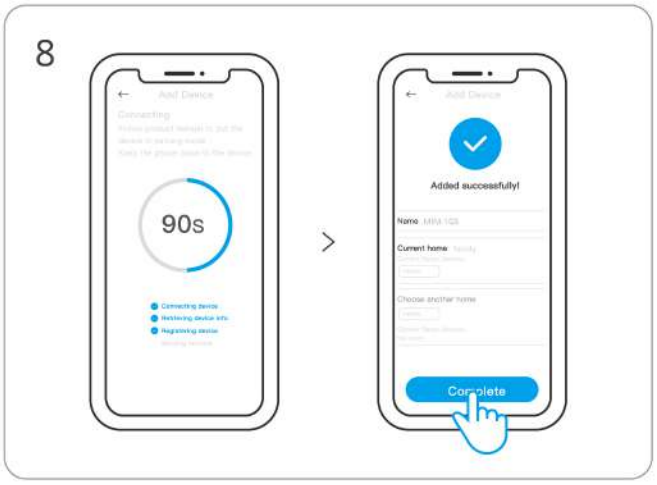

Device "Added completely"

Web Console Guide

Method 1: Access via AP Hotspot

When the device is in pairing mode, it will automatically enable an AP hotspot.
Connect to the device hotspot SONOFF_1GS_xxxx, then enter the following in your browser: **192.168.33.1**

to access the Web Console.

Method 2: Access via LAN

After the device is successfully connected to Wi-Fi, ensure your phone or computer is on the same local network. Then enter either:

MINI-1GS.local or the device's IP address

in your browser to access the Web Console.

Install the Device in an Electrical Box

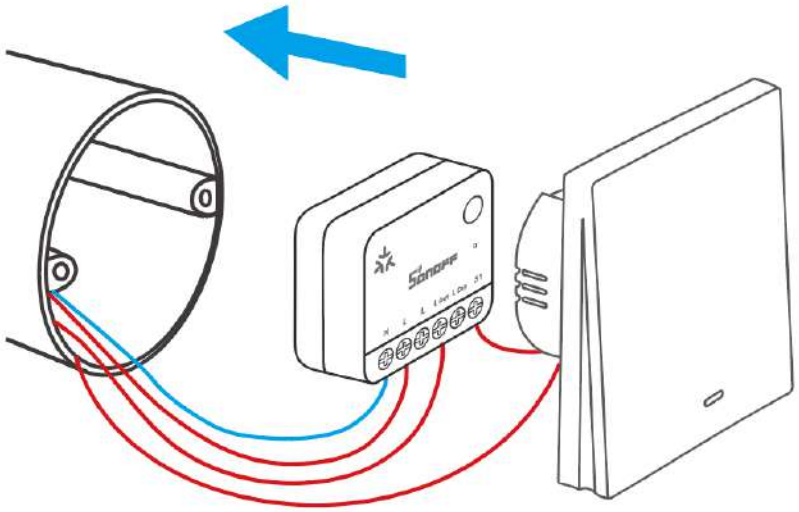

Factory Reset

Trigger conditions (any one condition met)

- Click "Restore Factory Settings" on the eWeLink App.
- Click "Restore Factory Settings" in the web control page.
- Press and hold the button for 10 seconds.

FCC compliance statement

Responsible Party Name: SONOFF TECHNOLOGY LLC

Address: 14777 NE 40th St, Suite 201 Bellevue, WA 98007

Email Address: usres@itead.cc FCC ID: 2APN5-MINI1GSP

1. This device complies with part 15 of the FCC Rules. Operation is subject to the following two conditions:

(1) This device may not cause harmful interference, and

(2) This device must accept any interference received, including interference that may cause undesired operation.

2. Changes or modifications not expressly approved by the party responsible for compliance could void the user's authority to operate the equipment.

Note: This equipment has been tested and found to comply with the limits for a Class B digital device, pursuant to part 15 of the FCC Rules. These limits are designed to provide reasonable protection against harmful interference in a residential installation. This equipment generates, uses and can radiate radio frequency energy and, if not installed and used in accordance with the instructions, may cause harmful interference to radio communications. However, there is no guarantee that interference will not occur in a particular installation. If this equipment does cause harmful interference to radio or television reception, which can be determined by turning the equipment off and on, the user is encouraged to try to correct the interference by one or more of the following measures:

—Reorient or relocate the receiving antenna.

—Increase the separation between the equipment and receiver.

—Connect the equipment into an outlet on a circuit different from that to which the receiver is connected.

—Consult the dealer or an experienced radio/TV technician for help.

FCC Radiation Exposure statement:

This equipment complies with FCC radiation exposure limits set forth for an uncontrolled environment.

This equipment should be installed and operated with a minimum distance of 20 cm between the radiator and your body.

This transmitter must not be co-located or operating in conjunction with any other antenna or transmitter.

EU Declaration of Conformity

Hereby, Shenzhen Sonoff Technologies Co., Ltd. declares that the radio equipment type MINI-1GS is in compliance with Directive 2014/53/EU. The full text of the EU declaration of conformity is available at the following internet address: https://sonoff.tech/compliance/

For CE Frequency

EU Operating Frequency Range:

Wi-Fi: 802.11 b/g/n20 2412—2472 MHz, 802.11 n40: 2422-2462 MHz

BLE: 2402—2480 MHz

EU Output Power:

Wi-Fi 2.4G≤20dBm

BLE≤10dBm

Under normal use of condition, this equipment should be kept a separation distance of at least 20 cm between the antenna and the body of the user.

WEEE Disposal and Recycling Information



WEEE Disposal and Recycling Information All products bearing this symbol are waste electrical and electronic equipment (WEEE as in directive 2012/19/EU) which should not be mixed with unsorted household waste. Instead, you should protect human health and the environment by handing over your waste equipment to a designated collection point for the recycling of waste electrical and electronic equipment, appointed by the government or local authorities. Correct disposal and recycling will help prevent potential negative consequences to the environment and human health. Please contact the installer or local authorities for more information about the location as well as terms and conditions of such collection points.

Scatola	Manuale

PAP 21	PAP 22
Carta	Carta
RACCOLTA DIFFERENZIATA	
Verifica le disposizioni del tuo Comune. Separa le componenti e conferiscile in modo corretto.	

Manufacturer: Shenzhen Sonoff Technologies Co., Ltd.

Address: 3F & 6F, Bldg A, No. 663, Bulong Rd, Shenzhen, Guangdong, 518000, China

Service email: support@itead.cc Website: sonoff.tech

Made in China

