DIY SPM

User manual V1.0

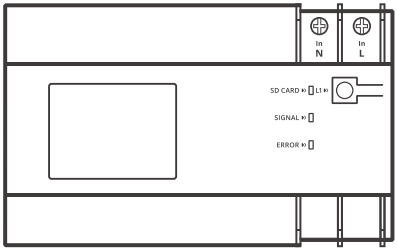

SPM-Main

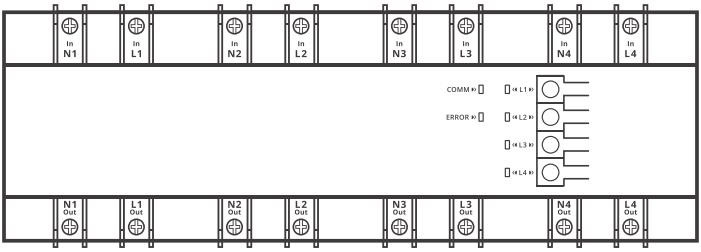

SPM-4Relay

SONOFF Smart Stackable Power Meter
(Main Unit+4-Relays)

中　文----------1-9　　English----------10-18　　FCC Warning----------19

产品介绍

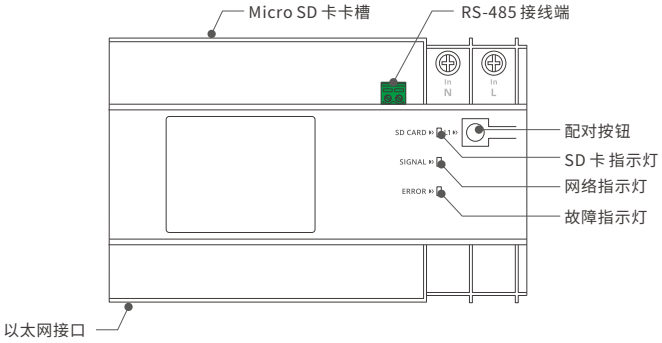

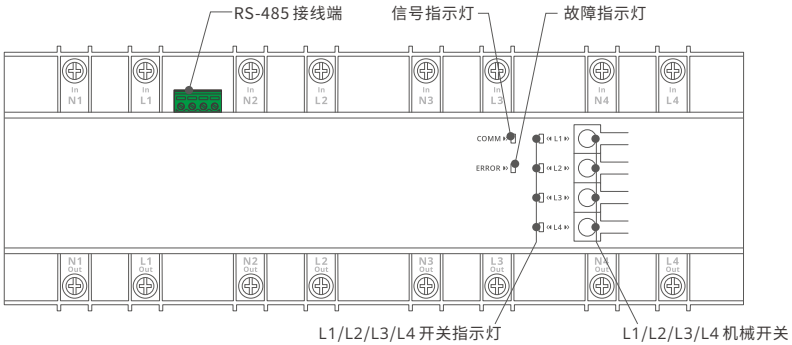

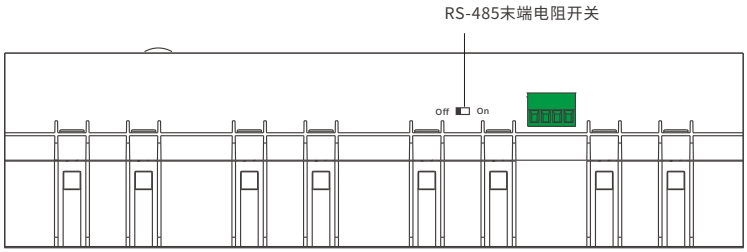

ⓘ 设备重量＜1kg，建议安装高度＜2m。

功能特点

SPM-Main 和 SPM-4Relay 分别为 SONOFF 智能堆叠式电表的主机和从机，两者需配套使用。通过主机配网，配网成功后，可在“易微联” App端对其所添加的从机进行控制。

主机:

本地电量统计　局域网功能　支持以太网　支持 Micro SD 卡

从机:

远程控制　电量统计　智能定时　过载保护　设备定位　操作记录

ⓘ 主机支持的Micro SD卡大小范围：8GB-32GB.

ⓘ 设备定位：在 eWeLink App端选择子设备，按一下设备定位图标，然后该子设备对应的从机“故障”信号指示灯将会闪烁约20秒。

使用说明

1. 断电

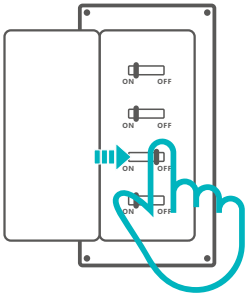

⚠ 设备安装、故障维修请由专业资质电工操作。切勿在设备通电时进行接线操作或触碰到接线端子，以免发生触电危险！

2. 接线

主机与从机，从机与从机相连方式：

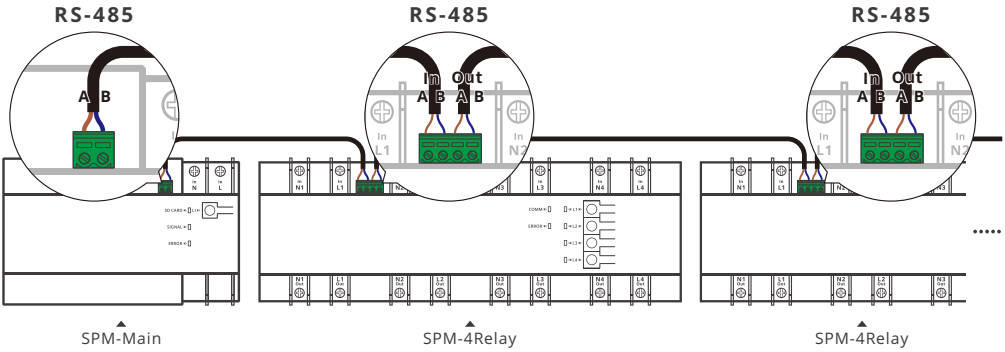

- 每1台主机最多支持接入32台从机（总接线长度不超过100米）。
- 主机与从机相连的线材必须为: 2芯屏蔽双绞线(RVVSP)，单根线径最小0.2mm²。
- 在干扰较为严重的应用场合，为保证485总线通讯可靠性，请将通讯总线屏蔽层单端接地(一端接地，另一端悬空)

控制灯具接线示意：

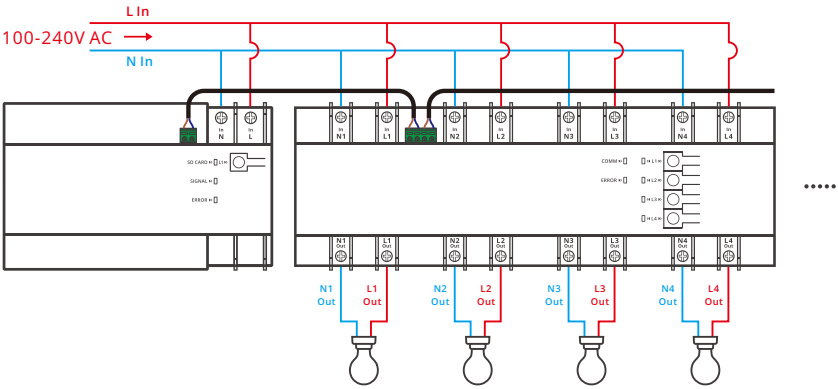

- 从机有4个通道，由第一通道给设备自身供电，所以第一通道必须接入电源；每个通道互相独立，仅当上方输入端接入电源后，对应通道才可正常输出。
- 上电前请确保线路接入无误。

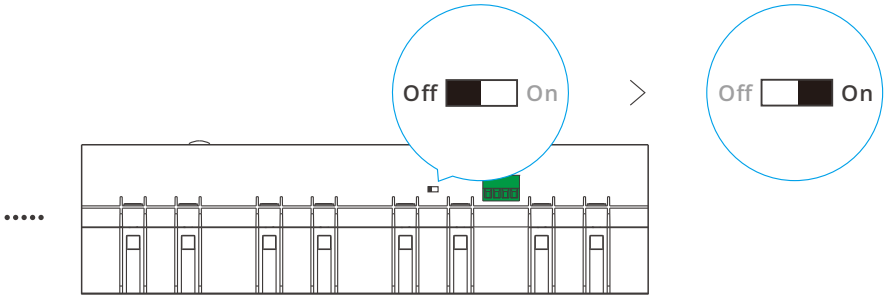

从机的“RS-485末端电阻开关”出厂默认关闭状态。为保证通信稳定，须将最末端从机的“RS-485末端电阻开关”切换至打开状态。

3.下载“易微联”App

易 微 联

Android™ & iOS

4. 上电

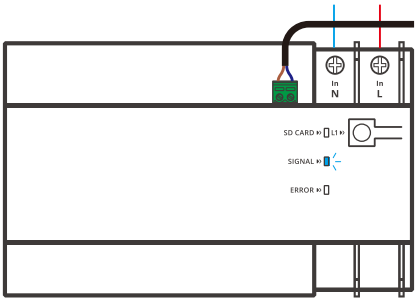

通电后，设备首次使用，默认进入蓝牙配网模式。网络指示灯呈“快闪状态”。

三分钟内没有进行配网，设备将退出蓝牙配网模式。如需再次进入，长按配对按钮5秒直到网络指示灯呈“快闪状态”即可。

5. 添加设备

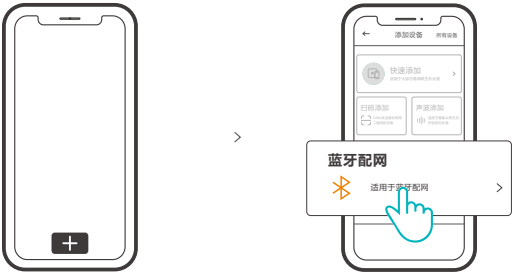

点击“+”，选择“蓝牙配网”，再根据 App 提示进行操作。

6. 主机添加从机

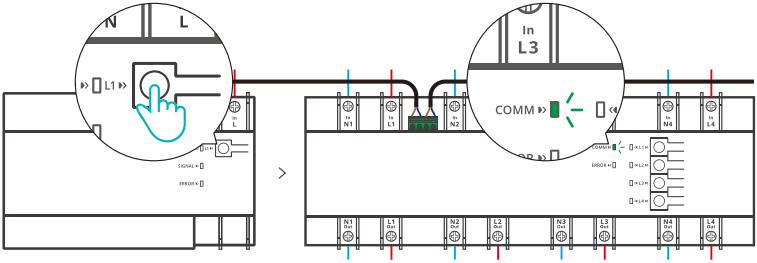

短按主机上的配对按钮，主机进入扫描状态，从机信号指示灯会呈”慢闪“状态，成功添加到从机后，从机将会作为子设备在 eWeLink App 的主机界面列表中显示。

(!) 超过20秒没有扫描到从机，主机将退出扫描状态。如需再次进行扫描，短按主机配对按钮即可。

(!) 将主机重新上电也可对其所连接的从机进行添加操作。

安装 Micro SD 卡(SPM-Main)

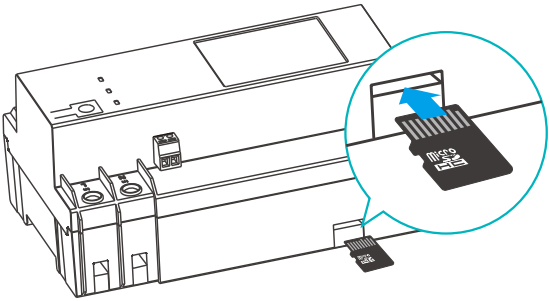

ⓘ 安装 Micro SD 卡 时切勿装反(Micro SD 卡 需另行购买)。

基本参数

主机

型号	SPM-Main
输入	100-240V ~ 50/60Hz 50mA Max
Wi-Fi	IEEE 802.11 b/g/n 2.4GHz
工作温度	-10°C~+40°C
App 支持系统	Android & iOS
外壳材料	PC V0
产品规格	142.5x90x66.5mm

从机

型号	SPM-4Relay
输入	100-240V ~ 50/60Hz 20A/Gang 80A/Total Max
输出	100-240V ~ 50/60Hz 20A/Gang 80A/Total Max
工作温度	-10°C~+40°C
外壳材料	PC V0
产品规格	250x90x66.5mm

主机指示灯状态说明

SD卡指示灯(绿色)

指示灯状态	状态描述
闪烁1下	正在读写SD卡或flash

网络指示灯(蓝色)

指示灯状态	状态描述
快速闪烁	蓝牙配网模式
常亮	设备在线
快闪一下	未连接路由器
快闪二下	已连接上路由器，但未连接到云端
快闪三下	固件升级中

故障指示灯(橙色)

指示灯状态	状态描述
闪烁（约20秒）	主机正在扫描子设备
常亮	芯片异常
常灭	无故障

从机指示灯状态说明

COMM 指示灯(绿色)

指示灯状态	状态描述
闪烁（约20秒）	主机正在扫描子设备
2-5秒周期性闪烁一下	通信正常

故障指示灯（橙色）

指示灯状态	状态描述
闪烁(约20秒)	App端触发"设备定位"功能
常亮	电量检测故障、温度、电流电压功率超过阈值
常灭	无故障

L1, L2, L3, L4 指示灯（红色）

指示灯状态	状态描述
亮	开
灭	关

主机以太网使用

主机必须先在 易微联App 端配网成功后再接入以太网使用，否则无法使用。

ⓘ 接入以太网后，主机优先使用以太网（Wi-Fi和以太网可以是不同网络）

主机重新配对

更换主机的账户或连接的WiFi时，需重新配对添加。长按主机配对按键5秒直到网络指示灯呈“快闪状态”，松开，此时设备进入蓝牙配网模式，即可再次通过App蓝牙配对添加设备。

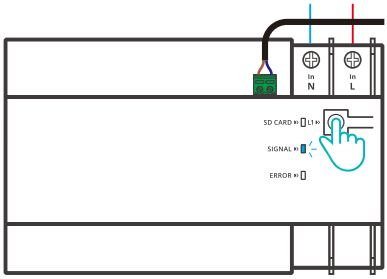

恢复出厂设置

在 eWeLink App 端“删除设备”，设备即恢复出厂设置。

485总线应用注意事项

线材选择：
使用两芯屏蔽双绞线(RVVSP)，铜制线芯≥0.2mm^2。

布线规范：
1. 总线长度合计不超过100m。
2. 在同一总线系统中，使用同种规格线材。
3. 尽量减少线路中的接点。接点处确保焊接良好，包扎紧密，避免松动和氧化。
4. 采用菊花链方式，杜绝星形连接和分叉连接。
5. 485总线屏蔽层单端接地。
6. 安装时，将总线末端设备的终端电阻开关切换为打开状态(其它设备该开关必须为关闭状态)。

常见问题

Wi-Fi设备与易微联APP配对失败

1. 确保设备进入配对模式.
   三分钟内设备没有配对成功，则自动退出配对模式。
2. 请开启定位模式以及允许获取定位权限
   配网前，请先开启手机的定位服务并允许获取定位权限，位置信息权限用于获取Wi-Fi列表信息。如果“禁用”手机定位服务，设备将无法添加。
3. 确保Wi-Fi运行在2.4GHz频段。
4. 确保正确输入Wi-Fi网络名称和密码，且没有包含特殊字符。
   密码错误是常见的配对失败原因。
5. 配对时为了确保良好的信号传输，请将设备靠近路由器。

Wi-Fi设备“离线”问题

请根据Wi-Fi LED指示灯状态检查以下问题：
LED灯每2秒闪烁一次，路由器连接失败。

1. 输入不正确的Wi-Fi网络名称和密码。
2. 确保你的Wi-Fi网络名称和密码没有包含特殊字符。例如，我们的系统无法识别希伯来语和阿拉伯语字符，导致Wi-Fi连接失败；
3. 路由器承载力较低。
4. Wi-Fi信号太弱。路由器和设备间隔太远，或者路由器与设备之前有障碍物导致信号无法传输。
5. 确保设备的MAC地址在MAC管理的白名单中。

LED指示灯连续闪烁两次，服务器连接失败

1. 确保网络连接正常。你可以通过手机或者电脑连接网络。如果连接失败，请检查网络。
2. 路由器承载力较低。连接到路由器的设备超过最大值。请查看你的路由器可以连接的最大设备数量。
   如果超过最大值，请删除个别设备或者更换一个承载力较高的路由器再次连接。
3. 请联系你的网络服务供应商以确认服务器地址没有被屏蔽：
   cn-disp.coolkit.cc (中国大陆)
   as-disp.coolkit.cc (除中国外亚洲地区)
   eu-disp.coolkit.cc (欧洲)
   us-disp.coolkit.cc (美国)

如果以上方法均无法解决此问题，请在易微联APP上通过“帮助&反馈”提交你的问题。

Product Introduction

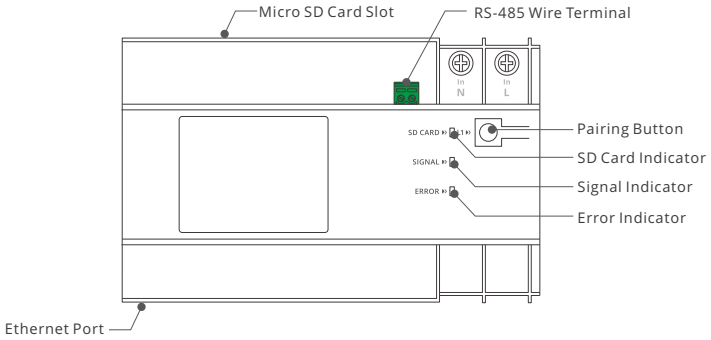

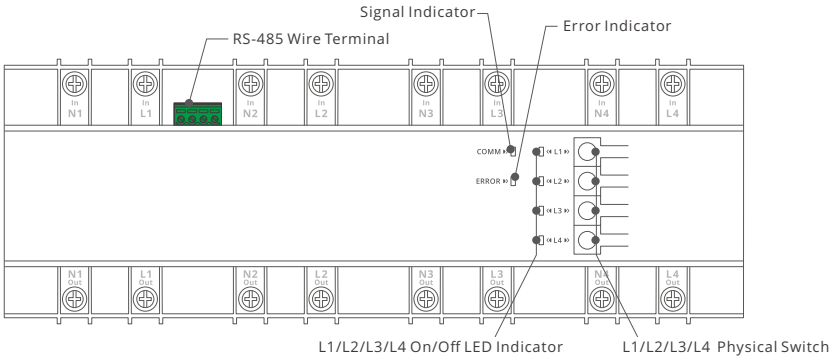

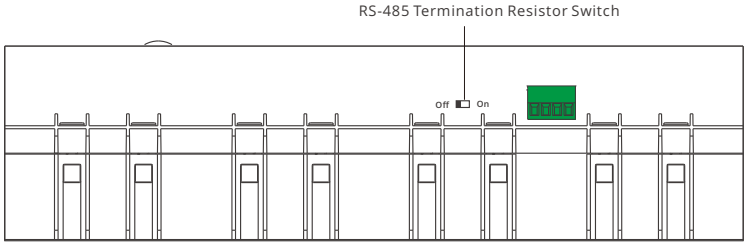

ⓘ The device weight is less than 1 kg; the installation height of less than 2 m is recommended.

Features

SPM-Main and SPM-4Relay are the main unit and slave unit of SONOFF Smart Stackable Power Meter, and both are designed to work together. You can control the added slave unit in the App through pairing the main unit with the eWeLink App.

SPM-Main:

Local Power Monitoring | LAN Control | Ethernet Connection | Support Micro SD Card

SPM-4Relay:

Remote Control | Power Monitoring | Schedule | Over-load Protection | Find Me | History Operation Record

ⓘ SPM-Main supported Micro SD card sizes: 8GB - 32GB.

ⓘ Find Me: Select the sub-device and press the “Find Me” icon on the eWeLink App, then the corresponding slave's error indicator of this sub-device will flash for 20s.

Operating Instruction

1. Power off

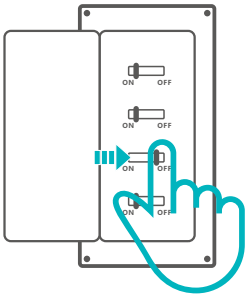

⚠ Please install and maintain the device by a professional electrician. To avoid electric shock hazard, do not operate any connection or contact the terminal connector while the device is powered on !

2. Wiring Instruction

Wiring Instruction of SPM-Main & SPM-4Relay and SPM-4Relay & the Slave Unit:

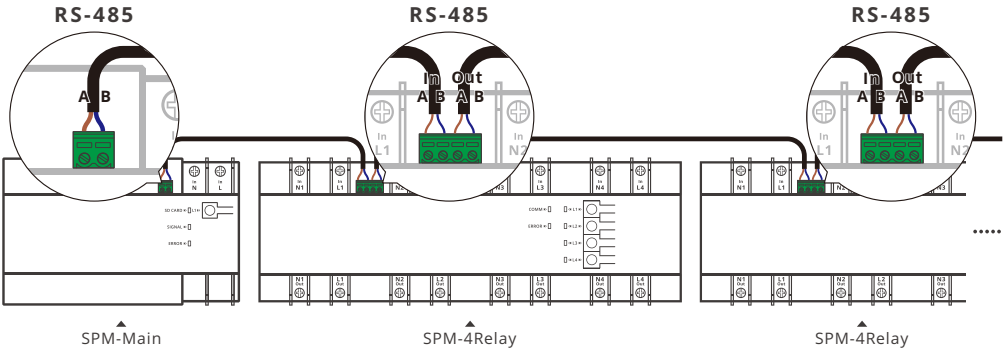

- The main unit can be added up to 32 slave units (The length of RS-485 bus shall be less than 100m).
- The wire connected to the main unit and slave unit must be 2-core RVVSP cable with single wire diameter of 0.2mm^2.
- To ensure the reliable communication of the RS-485 bus, please keep one end of the shielded layer connecting to the ground wire and the other end hanging in the air.

Light Fixture Wiring Instruction:

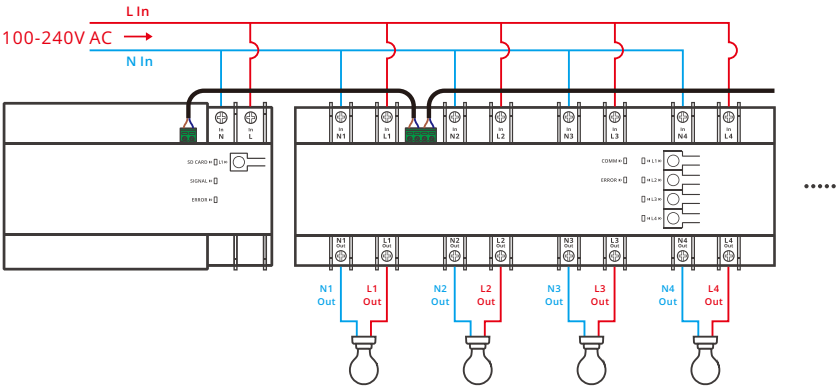

- There are 4 channels in SPM-4Relay, the first channel is designed to power the device so that it has to be powered on; Each channel is independent, only the input end is powered on can the corresponding output end of the channel work successfully.
- Ensure the proper wiring before powering the units on.

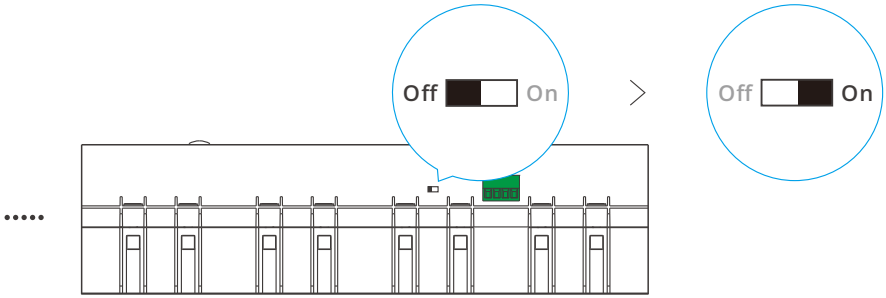

The "RS-485 Termination Resistor Switch" of the slave unit is off by default. To make sure stable communication, the "RS-485 Termination Resistor Switch" of the terminal slave unit shall be turned on.

3. Download the eWeLink App

Android™ & iOS

4. Power on

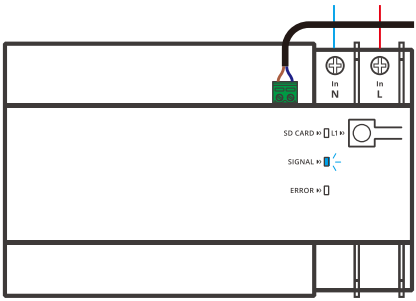

After powering on, the device will enter the Bluetooth Pairing Mode during the first use. The Signal Indicator flashes quickly.

The device will exit the Bluetooth Pairing Mode if not paired within 3mins. If you want to enter this mode again, please long press the pairing button for about 5s until the Signal Indicator flashes quickly and release.

5. Add Device

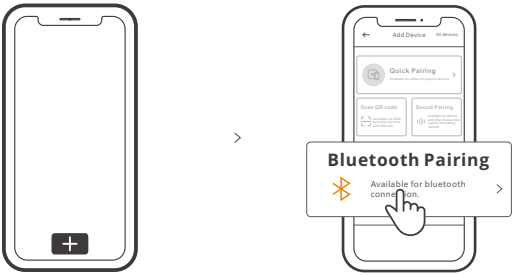

Tap “+” and select “Bluetooth Pairing”, then operate following the prompt on the App.

6. Add the Slave Unit to the Main Unit

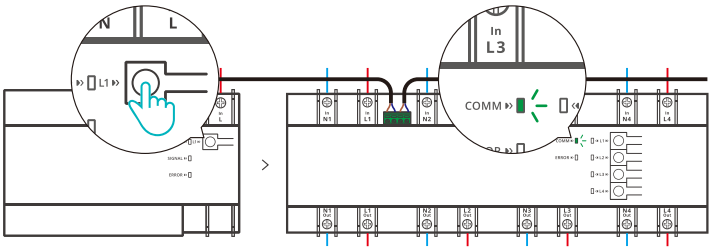

Press the Pairing Button on the main unit once to enable it enter the scan status, then the COMM Indicator of the slave unit“flashes slowly”. The slave unit will appear in the list of main unit interface on the eWeLink App as a sub-device after being added to the main unit.

- The slave unit has not been scanned successfully within 20s, the main unit will exit the scan status. If you want to scan the slave unit again, you can press the Pairing Button on the main unit once again.
- The connected slave unit can be added and controlled by powering on the main unit again.

Insert Micro SD Card (SPM-Main)

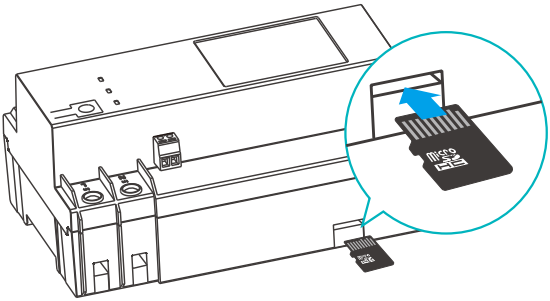

Make sure Micro SD Card is inserted correctly (Micro SD Card is sold separately).

Specifications

SPM-Main

Model	SPM-Main
Input	100-240V ~ 50/60Hz 50mA Max
Wi-Fi	IEEE 802.11 b/g/n 2.4GHz
Working Temperature	-10°C~+40°C
App Operating Systems	Android & iOS
Shell Material	PC V0
Dimension	142.5x90x66.5mm

SPM-4Relay

Model	SPM-4Relay
Input	100-240V ~ 50/60Hz 20A/Gang 80A/Total Max
Output	100-240V ~ 50/60Hz 20A/Gang 80A/Total Max
Working Temperature	-10°C~+40°C
Shell Material	PC V0
Dimension	250x90x66.5mm

Instruction of the SPM-Main Indicator Status

SD Card Indicator (Green)

Indicator Status	Status Instruction
Flashes Once	Reading SD Card or Flashing

Signal Indicator (Blue)

Indicator Status	Status Instruction
Flashes Quickly	Bluetooth Pairing Mode
Keep On	Device is Online
Flashes Quickly Once	Fail to Connect to Router
Flashes Quickly Twice	Connected to Router but Fail to Connect to Server
Flashes Quickly Thrice	Firmware Updating

Error Indicator (Orange)

Indicator Status	Status Instruction
Flashes (Appr. 20s)	The Main Unit is Scanning the Slave Unit
Keep On	Chip Error
Keep Off	Fault-free

Instruction of the SPM-4 Relay Indicator Status

COMM Indicator (Green)

Indicator Status	Status Instruction
Flashing (Appr. 20s)	The Main Unit is Scanning the Slave Unit
Flashes Once Periodicity in 2-5s	Normal Communication

Error Indicator (Orange)

Indicator Status	Status Instruction
Flashing (Appr. 20s)	Active the“Find Me”feature in the App
Keep On	Power Monitoring error, Temperature, Current or Voltage Exceeds the Threshold Value
Keep Off	Fault-free

L1/L2/L3/L4 On/Off LED Indicator (Red)

Indicator Status	Status Instruction
LED On	On
LED Off	Off

SPM-Main Ethernet Usage

Only the main unit was paired successfully in the eWeLink App can it be connected to Ethernet to work.

ⓘ After connecting to Ethernet, the main unit will use Ethernet in preference (Wi-Fi and Ethernet can be the different network).

SPM-Main Re-establish Pairing

The main unit need to be paired again when you replace its account or connected Wi-Fi. Long-press the pairing button for 5s until the Signal Indicator flashed quickly and release. Now the device had entered Bluetooth Pairing Mode, you can add the devices in the App through Bluetooth Pairing again.

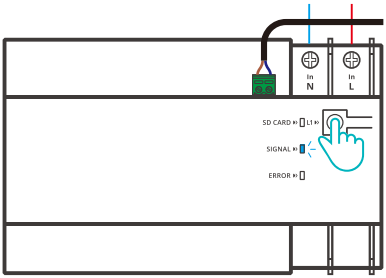

Factory Reset

Deleting the device on the eWeLink App indicates you restore it to factory setting.

RS-485 Bus Installation Cautions

Cable Selection:
Using 2-core RVVSP cable, copper wire core ≥0.2mm².

Wiring Recommendation:
1. The length of the cable bus shall be less than 100m.
2. Using the same type of cable in one cable bus system.
3. Reduce the connectors in the line. Ensure the solid connection and seal to avoid loosening and oxidation.
4. Daisy-chain connection rather than Star connection and Branch connection.
5. RS-485 bus's one end of the shielded layer shall be connected to the ground wire.
6. During the installation, please turn on the RS-485Termination Resistor Switch while other units are kept off.

Common Problems

Fail to pair Wi-Fi devices with eWeLink APP

1. Make sure the device is in pairing mode.
   The device will automatically exit the pairing mode if not paired within 3mins.
2. Please turn on the location service on your mobile phone and give the permission.
   Before choosing the Wi-Fi network, the location service should be turned on and the permission is given. Location information permission is used to obtain Wi-Fi list information. If you tap "Disable", the device will not be added.
3. Make sure your Wi-Fi network runs on the 2.4GHz band.
4. Make sure you entered a correct Wi-Fi SSID and password, no special characters contained.
   A wrong password is a very common reason for pairing failure.
5. You may get the device close to the router for a good signal transmission while pairing.

Wi-Fi devices "Offline" issues

Please check the following issues by the Wi-Fi LED indicator status:
The LED indicator blinks once every 2s means you fail to connect to the router.

1. Maybe you entered a wrong Wi-Fi SSID and password.
2. Make sure your Wi-Fi SSID and password don't contain special characters, for example, the Hebrew, Arabic characters. Our system can't recognize these characters so that fail to connect to the Wi-Fi.
3. Maybe your router has a lower carrying capacity.
4. Maybe the Wi-Fi signal strength is weak. Your router is too far away from your device, or there may be some obstacles between the router and the device so that the signal transmission is blocked.
5. Be sure that the MAC of the device is not on the blacklist of your MAC management.

The LED indicator flashes twice on repeated means you fail to connect to the server.

1. Make sure the Internet connection is normal. You can use your phone or PC to connect to the Internet, and if you fail to access, please check the availability of the Internet connection.
2. Maybe your router has a low carrying capacity. The number of devices connected to the router exceeds its maximum value. Please check the maximum number of devices that your router can carry. If the number of connected devices exceeds the maximum value, please delete some devices or change a lager router and try again.
3. Please contact your ISP and confirm our server address is not shielded:
   cn-disp.coolkit.cc (China Mainland)
   as-disp.coolkit.cc (in Asia except China)
   eu-disp.coolkit.cc (in EU)
   us-disp.coolkit.cc (in US)

If none of the above methods solved this problem, please submit your issue via help & feedback on the eWeLink App.

FCC Warning

Changes or modifications not expressly approved by the party responsible for compliance could avoid the user's authority to operate the equipment.

This device complies with part 15 of the FCC Rules. Operation is subject to the following two conditions: (1) This device may not cause harmful interference, and (2) this device must accept any interference received, including interference that may cause undesired operation.

FCC Radiation Exposure Statement:

This equipment complies with FCC radiation exposure limits set forth for an uncontrolled environment. This equipment should be installed and operated with minimum distance20cm between the radiator & your body. This transmitter must not be co-located or operating in conjunction with any other antenna or transmitter.

Note:

This equipment has been tested and found to comply with the limits for a Class B digital device, pursuant to part 15 of the FCC Rules. These limits are designed to provide reasonable protection against harmful interference in a residential installation. This equipment generates, uses and can radiate radio frequency energy and, if not installed and used in accordance with the instructions, may cause harmful interference to radio communications. However, there is no guarantee that interference will not occur in a particular installation. If this equipment does cause harmful interference to radio or television reception, which can be determined by turning the equipment off and on, the user is encouraged to try to correct the interference by one or more of the following measures:

— Reorient or relocate the receiving antenna.
— Increase the separation between the equipment and receiver.
— Connect the equipment into an outlet on a circuit different from that to which the receiver is connected.
— Consult the dealer or an experienced radio/TV technician for help.

Hereby, Shenzhen Sonoff Technologies Co., Ltd. declares that the radio equipment type SPM-Main, SPM-4Relay is in compliance with Directive 2014/53/EU.The full text of the EU declaration of conformity is available at the following internet address:

https://sonoff.tech/usermanuals

Shenzhen Sonoff Technologies Co., Ltd.

1001, BLDG8, Lianhua Industrial Park, shenzhen, GD, China

ZIP code: 518000 Website: sonoff.tech

MADE IN CHINA