38001EL-C

Sensor

Laser Sensor Head

- 3-wire laser sensor head, powered by low voltage 5VDC, output high or low level.
- When the sensor head detects the person or object in front of it, it will output high level.
- Detection distance 0.05-2.5m, sensing angle ±10°.
- Set the sensing detection distance by powering up or pressing the key.
- Five delay times can be set (2, 5, 10, 30, 60s).
- Suitable for lighting staircases, courtyards, aisles, corners, corridors, etc.

CE RoHS

Mechanical Structures

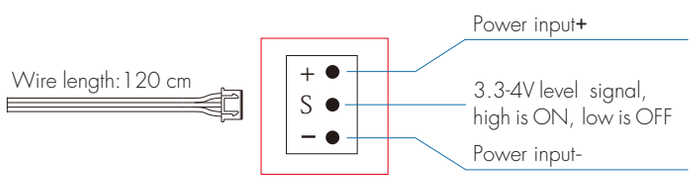

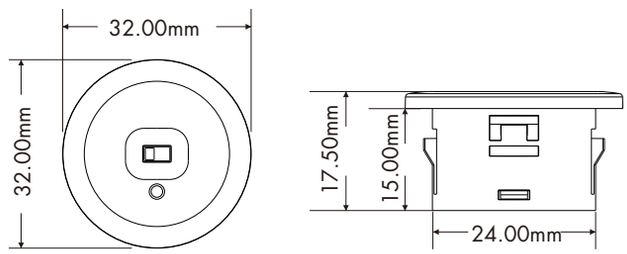

SET Key Function

Detection distance setting:
The detection distance range is 0.05-2.5m,
and the detection distance is set automatically at the time of power-on.

If there is no obstacle in front of the sensor head at the time of power-on,
the detection distance is automatically set to 2.5m.

If there is an obstacle in front of the sensor head at the time of power-on,
for example: the sensor head is 1m away from the wall in front of it,
the detection distance will be set to 1m automatically.

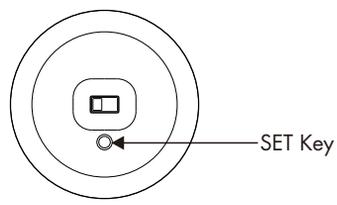

Detection distance can also be set by short pressing the SET key within 60 seconds of powering up the sensor head.
Note: Don't cover in front of the sensor head when you press the SET key.

Delay time setting:
Within 60 seconds of powering up the sensor head, long press the SET key for 2 seconds to set 5 delay times (2, 5, 10, 30, 60 seconds).
When set to 2 seconds delay time, the indicator and output LED will flash once;
When set to 5 seconds delay time, the indicator and output LED will flash twice;
When set to 10 seconds delay time, the indicator and output LED will flash 3 times;
When set to 30 seconds delay time, the indicator and output LED will flash 4 times;
When set to 60 seconds delay time, the indicator and output LED will flash 5 times;
Note: 1. The first long press after powering up the sensor head does not change the delay time, but only indicates the current delay time by flashing the light.
2. The factory default delay time is 2 seconds,
i.e., after the human body/objects leave the sensing range, the output signal will become low after 2 seconds delay.

Sensor Head Installation Position

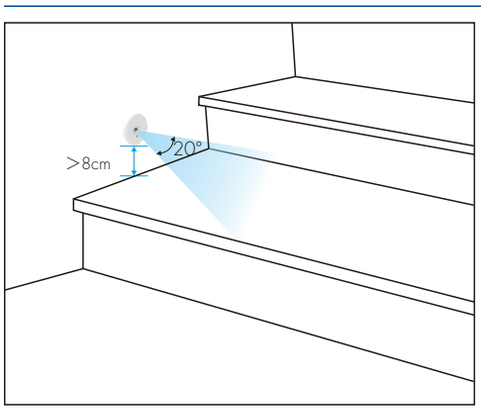

When installing on stairs, install at a height of 8cm or more,
as far away from the foot elevation as possible.
Make sure that your foot steps up just enough to block the laser
and trigger the sensor to light up.

Sensor Head Installation and Application

● One EL-C sensor head + one E1-L sensor constant voltage LED controller

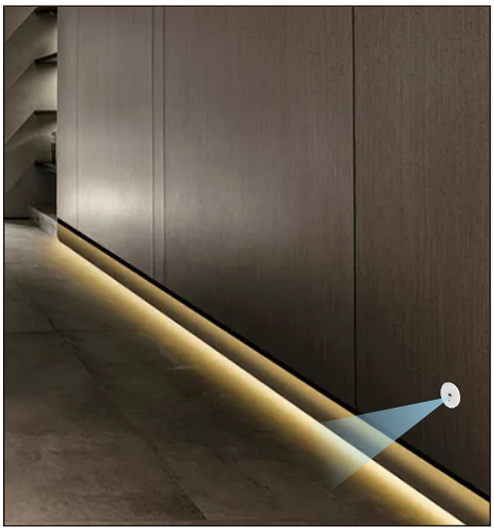

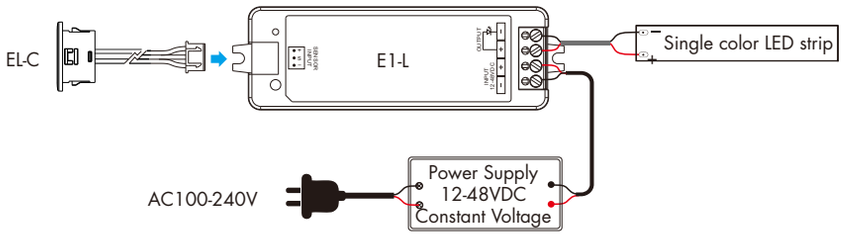

For a single application, it is recommended to set the delay time of the laser sensor head to 30 or 60s.
Realize people come and light up, and turn off the light at a delayed time when people leave.

● Multiple EL-C sensor head + multiple E1-L sensor constant voltage LED controller

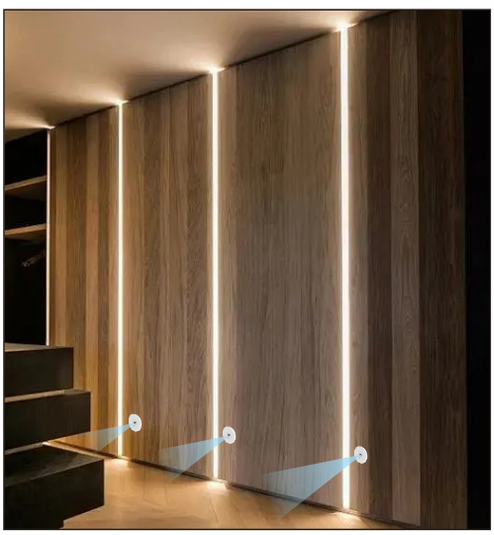

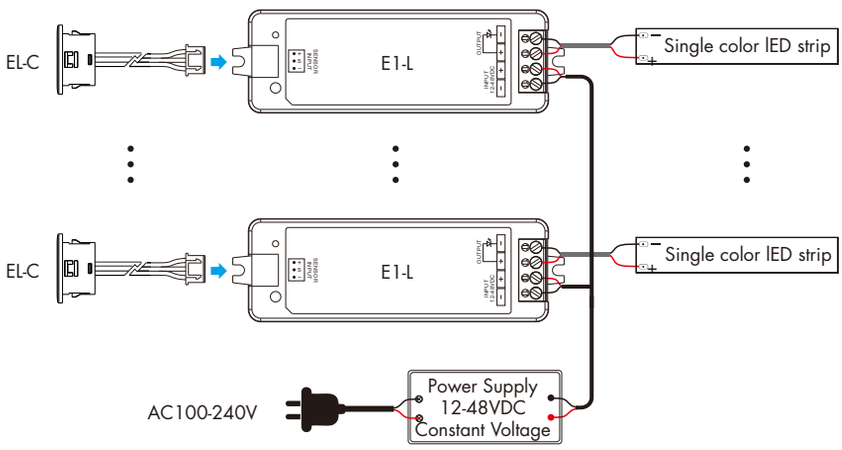

For multiple applications, it is recommended to set the delay time of all laser sensor head to 5 or 10s.
Realize the sequential switching control of multiple lights according to the direction of human walking.

● Dual EL-C sensor head + ES-V dual sensor Dimming & CCT constant voltage LED controller

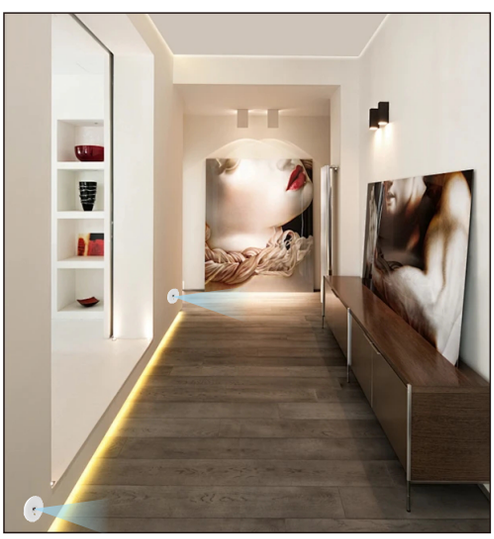

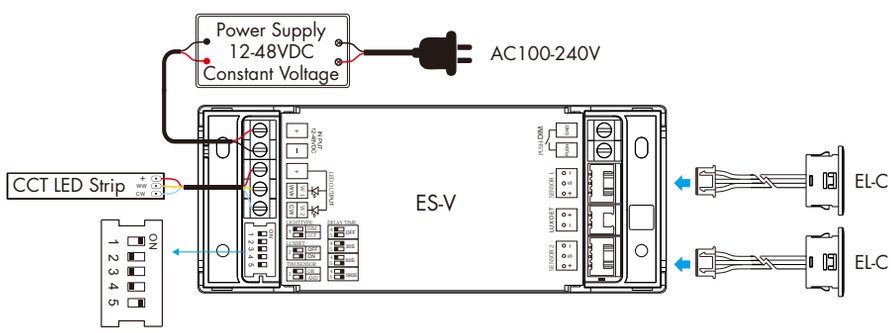

The ES-V constant voltage controller is connected to two laser sensor head
which are installed on each side of the corridor.
The delay time of the laser sensor head is set to 2s (default value),
Set DIP switch 3 to OR (light on when any one of the sensing inputs is on).
Set DIP switch 4-5 to 30, 60 or 180s.
Realize the light will be on when people come to the corridor and turn off the light when people leave.
Note: Since the detection distance of the sensor head is 2.5 meters, when the width of the corridor
or staircase is 2.5-5m, two sensor head can be installed opposite to each other.

● Dual EL-C sensor head + ES32 sensor stair light controller

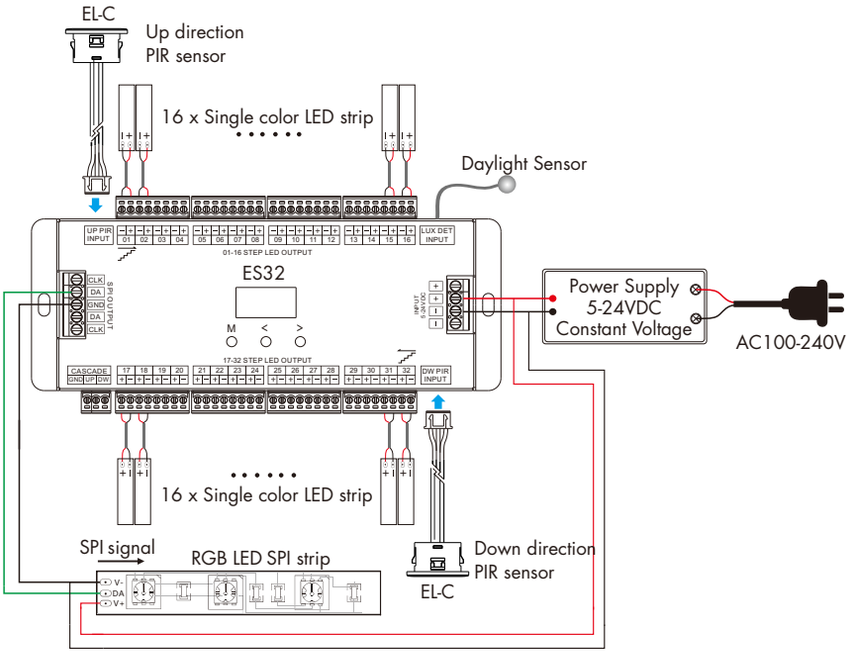

Connect the ES32 sensor stair light controller to two laser sensor head, which are installed at the top and bottom of the stairs.
Set the delay time of the laser sensor head to 2s (default).
Set the delay off time by the OLED screen(5s, 10s, 15s, 20s, 30s, 1min, 3min, 5min, 10min) .
Achieve sequential switching control of multiple staircase lights.

Installation Precaution

1. The sensing head should be installed in a dry environment and keep away from windows, air conditioner and fans.
2. The sensing head should be installed in the correct direction and angle.
3. There should not be shelter(screen, furniture, large bonsai) within the range of detection.
4. Avoid touching the surface of the detector and clean the surface of the optical lens with a damp soft cloth or cotton cloth regularly to prevent dust from affecting the sensitivity.
5. This product is not fireproof, do not immerse in water or use near fire source.