User Manual SNZB-03PR2 (EN)

Zigbee Motion Sensor

User Manual V1.0

Introduction

SNZB-03PR2 is a low-power Zigbee 3.0 protocol-based motion sensor that utilizes infrared sensing technology to detect moving objects in real-time within its environment. It supports smart scenes linking with other smart devices, making it easy to achieve functions like automatic lighting when someone enters a room and turning off lights when the area is vacant, perfect for hallways and corridors. It can also be used for security purposes such as detecting unauthorized entry. It can trigger a camera to record a video, activate a sound alarm through the gateway, and send app notifications to alert you, among other capabilities.

Motion Detection

Quick Detection

Light Sensing

2-Year Battery Life

ⓘ The functional characteristics depend on the functionality of the Zigbee gateway.

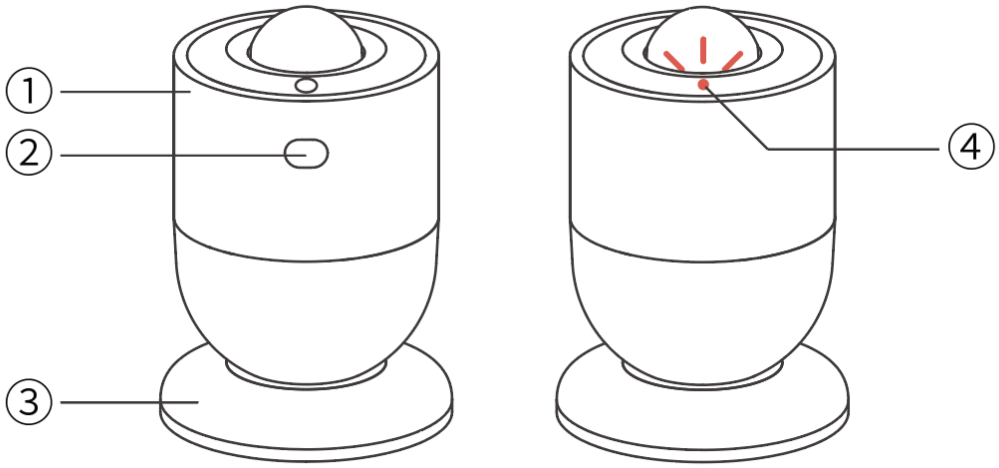

① Motion sensor	② Button	③ Magnetic base
④ LED indicator (Red)		

Instruction of LED indicator status

LED indicator status	Status instruction
Flash slowly for 180 seconds	First–time power on/press and hold button for 5s to enter pairing mode
Keep on for 3s and remain off	Pairing success
Exit flashing slowly and remain off	Pairing failure/timeout
Flash twice quickly (after short press the button)	Added to the gateway and online
Flash twice quickly and once long, repeated for 30s	Abnormal Zigbee communication
Quick flash 5 times	Restored to factory settings

Specification

SenseGuard Motion Gen2	
Product series	SenseGuard Series
Product name	Zigbee Motion Sensor
Model	SNZB-03PR2
MCU	TLSR8656
Input	3V⎓
Battery model	CR2477
Colour	White
Product dimension	44x44x65 mm
Net weight	42.7 g (with battery)
Casing materials	PC
Zigbee	IEEE802.15.4
Pairing time	180 s
Communication distance	Open area 100 m
Applicable place	Indoor
Detection angle	110°
Detection distance	6m
Working temperature	-10°C ~ 60°C
Working humidity	5-95%RH, non-condensing
Certification	CE/FCC/RoHS

Download the eWeLink App & Add the SONOFF Zigbee gateway.

Please download the "**eWeLink**" App from **Google Play Store** or **Apple App Store**.

ITEAD - 黎业军(2602432)

eWeLink

Power On

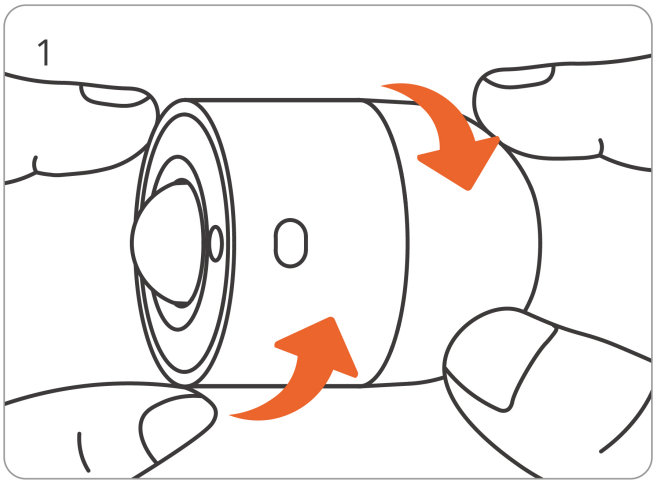

Rotate to open the sensor

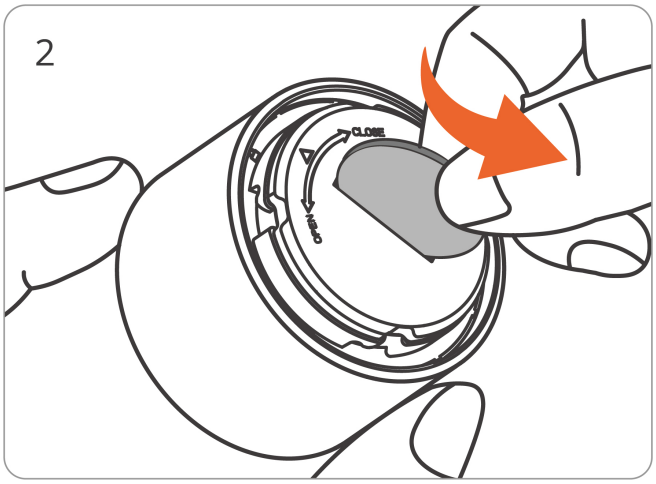

Use a coin or another tool to unscrew the battery cover

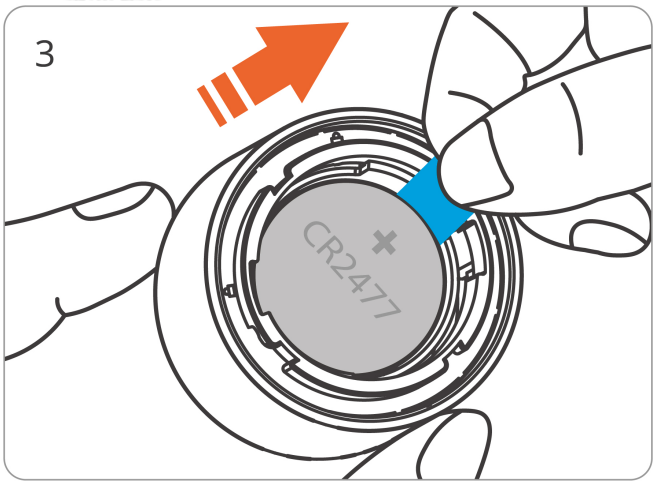

Take out the battery insulation sheet

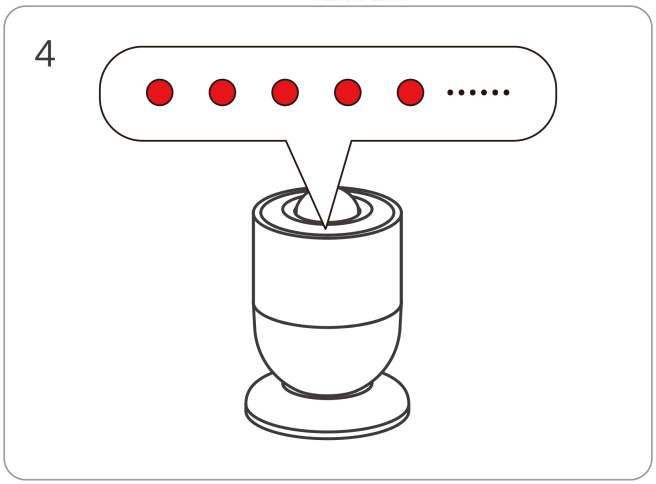

If used for the first time, the device will enter pairing mode by default after being powered on, and the LED indicator will be in a slow flashing state.

ⓘ If the device is not paired within 3 minutes, it will exit pairing mode. To re-enter pairing mode, long press the device button for 5 seconds until the LED indicator is in a slow flashing state.

Add Device

1

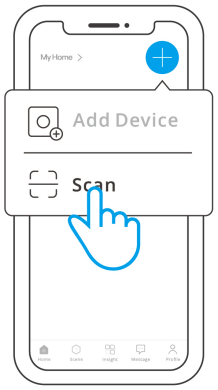

Enter "Scan"

2

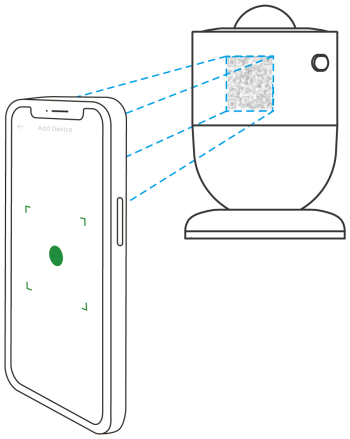

Scan the QR code on the device

3

Select "Add Device"

4

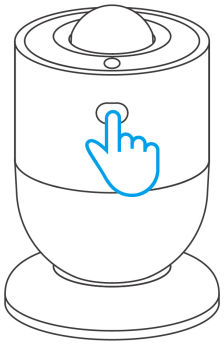

(If the device exits pairing mode)

Long press the button for 5 seconds

5

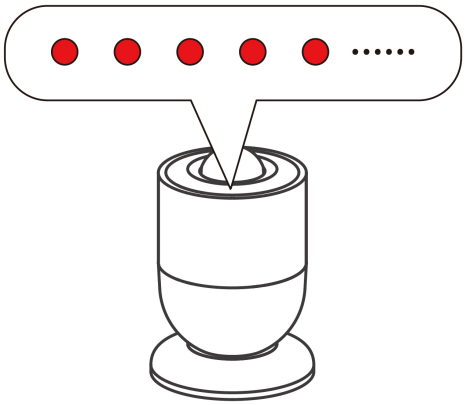

Check the LED flashing status(slow flashing)

6

Select a Zigbee gateway

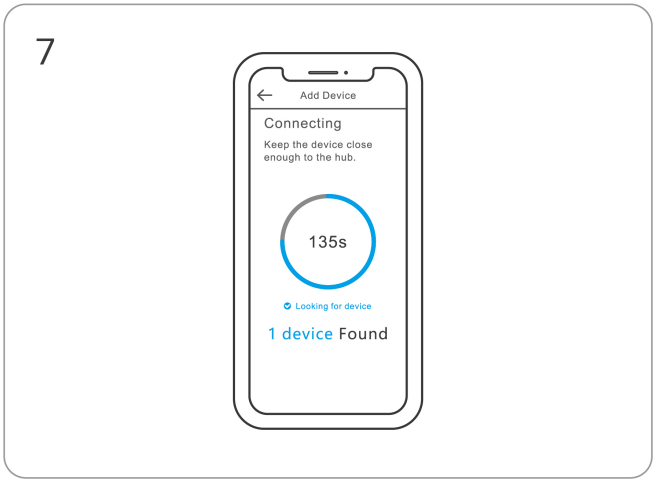

Wait until the device is added

Zigbee Gateway Compatibility

Compatible Gateways	
Recommended SONOFF Gateways	ZBBridge-P, ZBBridge-U, NSPanel Pro, iHost
Other Compatible SONOFF Gateways	ZBDongle-P, ZBDongle-E, Dongle-M, Dongle-PMG24, Dongle-LMG21
Compatible Third-party Gateways	**Amazon:** Echo Plus 2nd, Echo 4th Gen, Echo Show 2nd **SmartThings:** Aeotec Smart Home Hub V3

ⓘ The device supports other gateways using the Zigbee 3.0 protocol. Compatibility is subject to the actual product.

ⓘ The brightness detection function may be unavailable under certain gateways.

Effective Communication Range Verification

Short press the device button at the desired location for installation after adding the device. If the sensor is within the effective communication range of the hub or router on the same Zigbee network, the LED indicator will flash twice.

Detection Zone

The sensor has a detection range of approximately 6 meters and a detection angle of around 110 degrees.

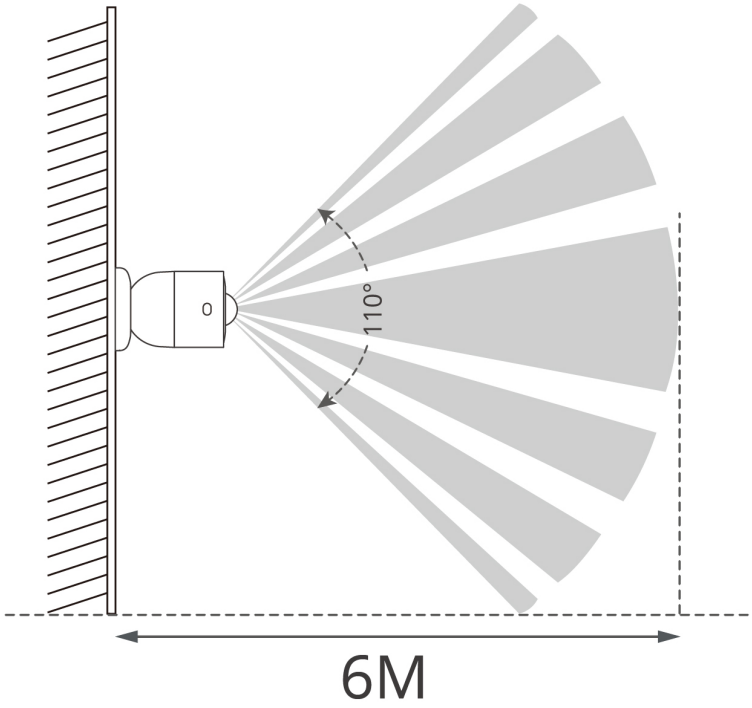

ⓘ When the temperature difference between the ambient environment and the human body is large (approximately 20 ˚C or more), the detection range may increase.

Installation

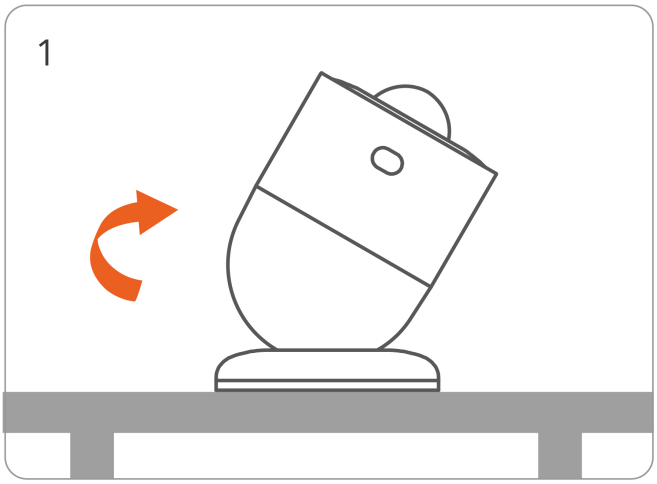

Place on the desktop

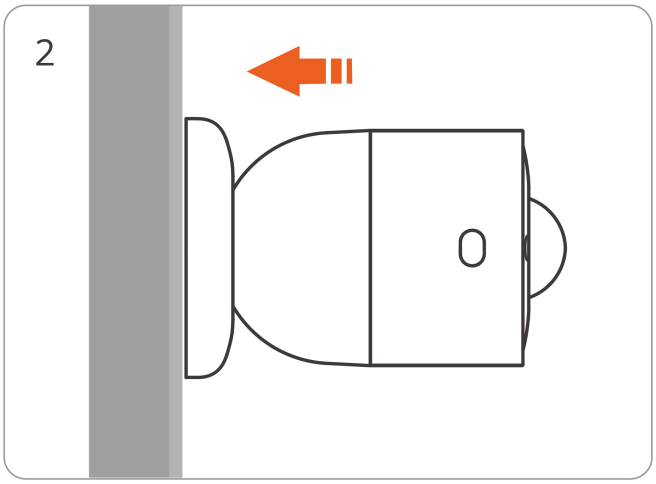

Attached to the metal surface with the magnetic base

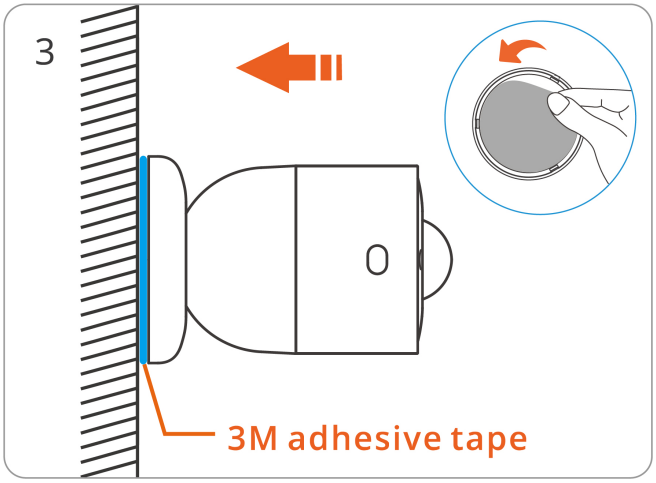

Stick to the wall with 3M adhesive of the base

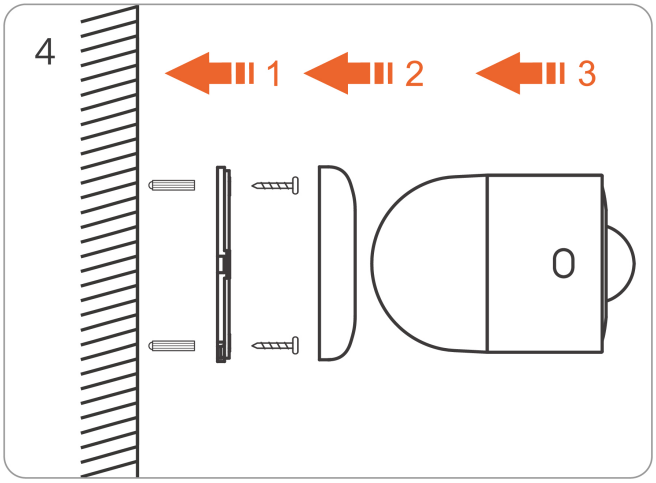

Base screws fixed to the wall

ⓘ The equipment is only suitable for mounting at heights ≤ 2 m.

Installation Notifications

ⓘ To avoid false alarms, adjust the sensor angle or avoid installing in the following locations:

(1) Areas with frequent pet activity

(2) Direct exposure to infrared sources such as sunlight, vehicle headlights, or incandescent lamps

(3) Locations where temperature changes rapidly within the detection area due to warm or cool air from air conditioners, or steam from humidifiers

ⓘ To avoid missed detections, avoid the following installation conditions:

(1) Materials such as glass or acrylic between the sensor and the target that block infrared transmission

(2) Targets that are nearly stationary or moving at high speed

Factory Reset

Long press the device button for 10 seconds until the LED indicator flashing quickly 5 times. The device will be restored to factory settings.

ITEAD - 黎业军(2602432)

FCC compliance statement

Responsible Party Name: SONOFF TECHNOLOGY LLC

Address: 14777 NE 40th St, Suite 201 Bellevue, WA 98007

Email Address: usres@itead.cc FCC ID: 2APN5-SNZB03PR2

1. This device complies with part 15 of the FCC Rules. Operation is subject to the following two conditions:

(1) This device may not cause harmful interference, and

(2) This device must accept any interference received, including interference that may cause undesired operation.

2. Changes or modifications not expressly approved by the party responsible for compliance could void the user's authority to operate the equipment.

Note: This equipment has been tested and found to comply with the limits for a Class B digital device, pursuant to part 15 of the FCC Rules. These limits are designed to provide reasonable protection against harmful interference in a residential installation. This equipment generates, uses and can radiate radio frequency energy and, if not installed and used in accordance with the instructions, may cause harmful interference to radio communications. However, there is no guarantee that interference will not occur in a particular installation. If this equipment does cause harmful interference to radio or television reception, which can be determined by turning the equipment off and on, the user is encouraged to try to correct the interference by one or more of the following measures:

—Reorient or relocate the receiving antenna.

—Increase the separation between the equipment and receiver.

—Connect the equipment into an outlet on a circuit different from that to which the receiver is connected.

—Consult the dealer or an experienced radio/TV technician for help.

FCC Radiation Exposure statement:

This equipment complies with FCC radiation exposure limits set forth for an uncontrolled environment.

This equipment should be installed and operated with a minimum distance of 20 cm between the radiator and your body.

This transmitter must not be co-located or operating in conjunction with any other antenna or transmitter.

EU Declaration of Conformity

Hereby, Shenzhen Sonoff Technologies Co., Ltd. declares that the radio equipment type

SNZB-03PR2 is in compliance with Directive 2014/53/EU. The full text of the EU declaration of conformity is available at the following internet address: https://sonoff.tech/compliance/

For CE frequency

EU Operating Frequency Range:

Zigbee: 2405—2480 MHz

EU Output Power:

Zigbee≤10dBm

Under normal use of condition, this equipment should be kept at a separation distance of at least 20 cm between the antenna and the body of the user.

WEEE Disposal and Recycling Information

ITEAD - 黎业军(2602432)

WEEE Disposal and Recycling Information All products bearing this symbol are waste electrical and electronic equipment (WEEE as in directive 2012/19/EU) which should not be mixed with unsorted household waste. Instead, you should protect human health and the environment by handing over your waste equipment to a designated collection point for the recycling of waste electrical and electronic equipment, appointed by the government or local authorities. Correct disposal and recycling will help prevent potential negative consequences to the environment and human health. Please contact the installer or local authorities for more information about the location as well as terms and conditions of such collection points.

WARNING

· Do not ingest battery, Chemical Burn Hazard.

· This product contains a coin / button cell battery. If the coin / button cell battery is swallowed, it can cause severe internal burns in just 2 hours and can lead to death.

· Keep new and used batteries away from children.

· If the battery compartment does not close securely, stop using the product and keep it away from children. If you think batteries might have been swallowed or placed inside any part of the body, seek immediate medical attention.

· Leaving a battery in an extremely high temperature surrounding environment that can result in an explosion or the leakage of flammable liquid or gas.

· A battery subjected to extremely low air pressure that may result in an explosion or the leakage of flammable liquid or gas.

· Do not replace a battery with an incorrect type.

· Disposal of a battery into fire or a hot oven, or mechanically crushing or cutting of a battery, that can result in an explosion.

· This appliance contains non–rechargeable batteries; these batteries must not be recharged.

UL 4200A compliance statement

⚠ WARNING

- **INGESTION HAZARD**: This product contains a button cell or coin battery.
- **DEATH** or serious injury can occur if ingested.
- A swallowed button cell or coin battery can cause **Internal Chemical**
- **Burns** in as little as **2 hours**.
- **KEEP** new and used batteries **OUT OF REACH of CHILDREN.**
- **Seek immediate medical attention** if a battery is suspected to be swallowed or inserted inside any part of the body.

Warning: contains coin battery.

• Remove and immediately recycle or dispose of used batteries according to local regulations and keep away from children. Do NOT dispose of batteries in household trash or incinerate.

• Even used batteries may cause severe injury or death.

• Call a local poison control center for treatment information.

• Compatible battery type: CR2477

• Nominal battery voltage: 3V⎓

• Non–rechargeable batteries are not to be recharged.

• Do not force discharge, recharge, disassemble, heat above 60℃ or incinerate. Doing so may result in injury due to venting, leakage or explosion resulting in chemical burns.

• Ensure the batteries are installed correctly according to polarity(+ and –)•

• Do not mix old and new batteries, different brands or types of batteries, such as alkaline, carbon–zinc, or rechargeable batteries.

• Remove and immediately recycle or dispose of batteries from equipment not used for an extended period of time according to local regulations.

• Always completely secure the battery compartment. If the battery compartment does not close securely, stop using the product, remove the batteries, and keep them away from children.

ITEAD - 黎业军(2602432)

Scatola	Manuale	Borsa	Borsa
PAP 21	PAP 22	CPE 1	LDPE 4
Carta	Carta	Plastica	Plastica
RACCOLTA DIFFERENZIATA			
Verifica le disposizioni del tuo Comune. Separa le componenti e conferiscile in modo corretto.			

Manufacturer: Shenzhen Sonoff Technologies Co., Ltd.

Address: 3F & 6F, Bldg A, No. 663, Bulong Rd, Shenzhen, Guangdong, 518000, China

Service email: support@itead.cc Website: sonoff.tech

Made in China

ITEAD - 黎业军(2602432)