Model Number:

DY-32432-AC230V

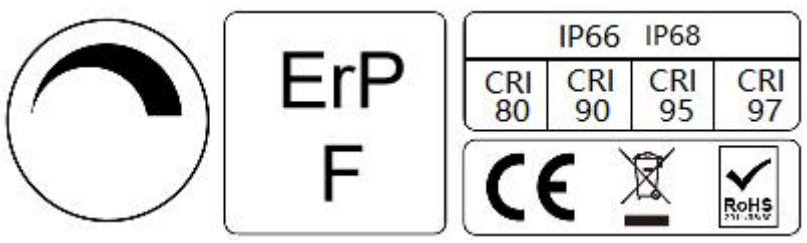

Deyi Lighting is committed to provide high quality LED lighting product and superior service for market.

1. The LED are packaged with pure gold wires and large-size chips.

2. Only one Bin LED is used for each order, and keep the same Bin LED in subsequent orders to ensure the consistency of the product.

3. The production process adopts high-temperature, lead-free SMT technology, the solder joints are smooth and full.

4. Use double-layer PCB to ensure stable electrical performance.

5. Use original authentic 3M tape, strong and long-lasting adhesion.

6. A variety of installation accessories are optional, flexible and convenient to use.

7. Different IP grade are available: IP66，IP68.

8. High light transmittance, environment friendly silicone material is used for waterproof product, colorless, odorless and anti-yellowing.

Product description

1. Dimensions: 10mm, 5m/roll

2. Power: 12W/m

3. Beam angle: 180°

4. LED quantity: 432LEDs/m

5. LED color: 2700K, 3000K, 4000K, 6000K

6. Cut length: AC230V 72LEDs/167mm

7. PCB material: double layer FPC

8. Life time: 36000hours

9. IP grade: IP66/IP68

Application

Home decoration lighting

The outline of the building is lightened

Decoration of entertainment places

The landscape brightens

Other auxiliary lighting

Product picture

Application scenarios

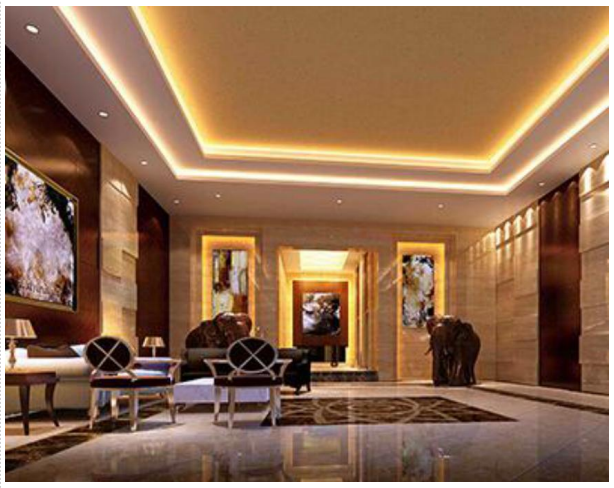

Home decoration lighting

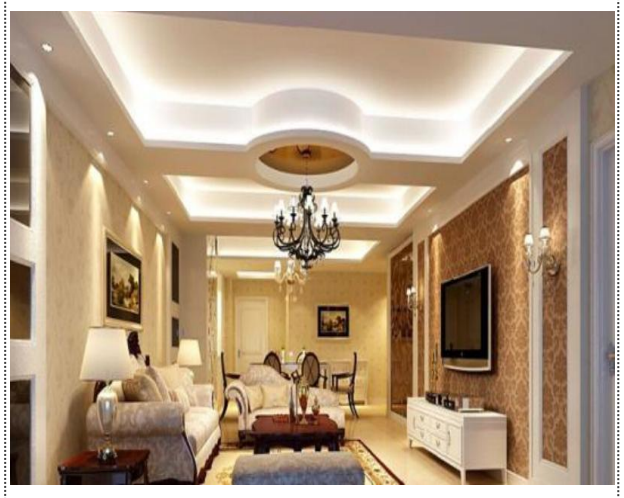

Home decoration lighting

Decoration of entertainment places

The landscape brightens

The outline of the building is lightened

Technical parameters

Optical parameters(white)	Electrical performance parameters	Other parameters
Luminous: 1080Lm/m CCT:2700-6000K CRI: Ra>90 Beam angle: 120° Light efficiency: 90Lm/W	Voltage: AC230V Current: / Power: 12W/m	Energy efficiency grade: F Storage temperature: -20~+60℃ Working temperature: -20~+60℃ Life time: >36000 hours Warranty: 3 years

Dimensions

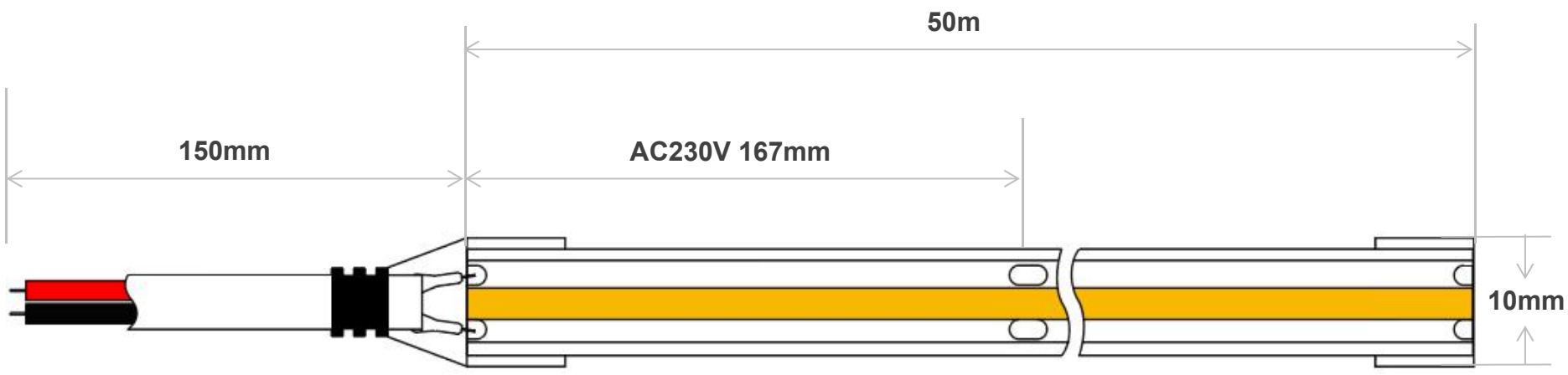

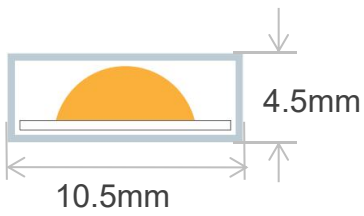

IP66-Silicone Tube

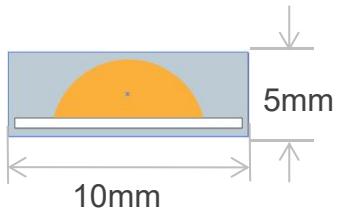

IP68-Silicone Extrusion

Color standard

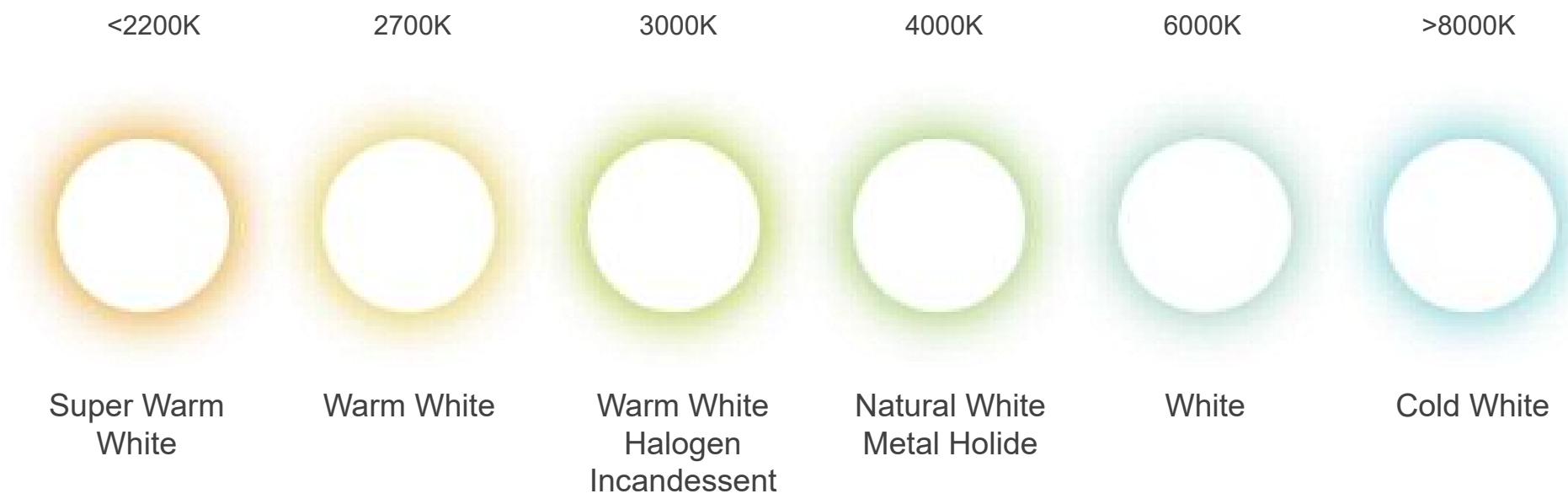

Connection diagram

1. Connection method one

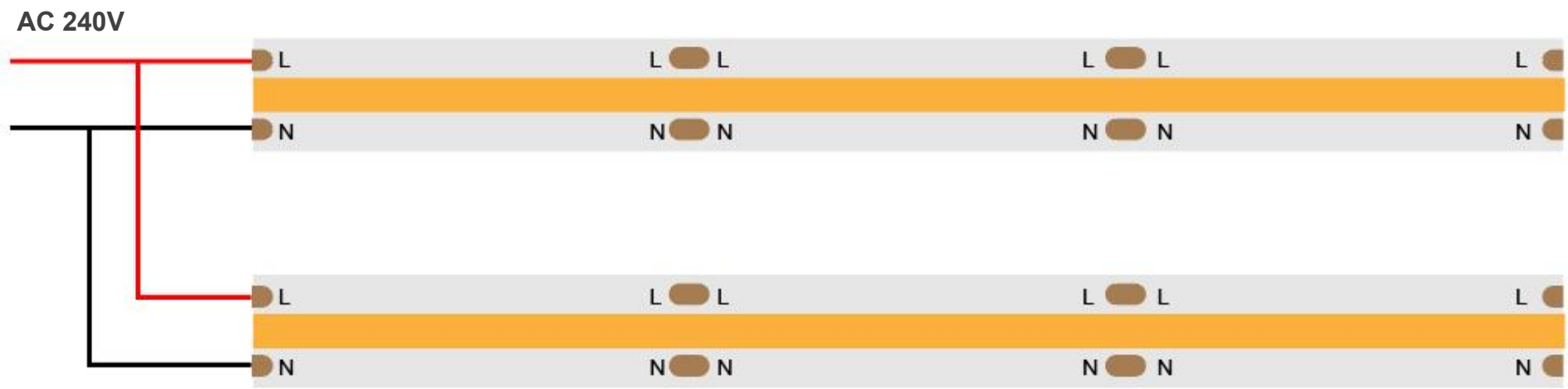

2. Connection method two

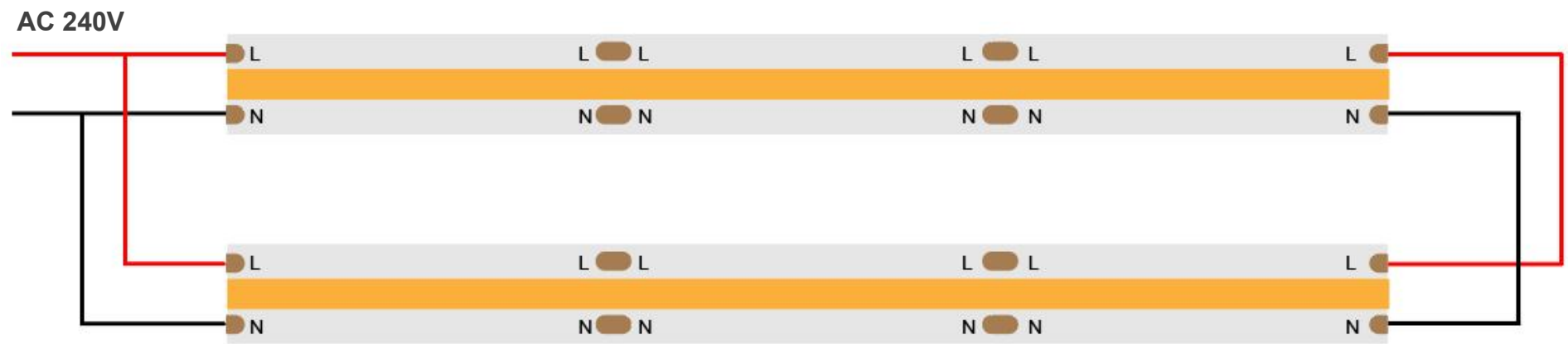

Precautions

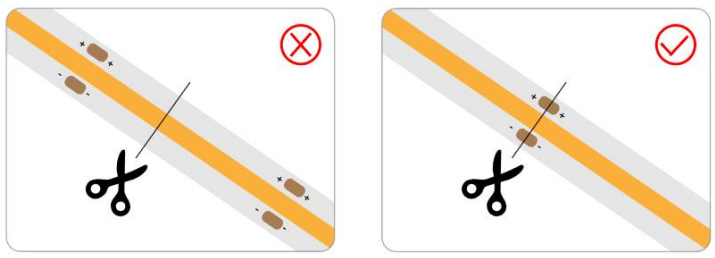

- Please cut it according to the cutting line, do not cut it at other positons.

- Please make sure the wall is dry and free of dust before pasting.

- Do not fold, twist or step on the led strips.

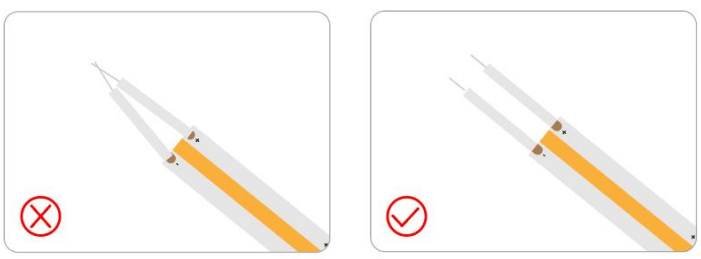

- The LED strip wire ends cannot be shorted together.

Product features

1. Silicone casing or silicone extrusion molding process, the product has high consistency, short production cycle.

2. A molding shell, protection grade > IP65, safety performance is high, the indoor outside, all can use.

3. Without external power adapter, AC110V / 220V mains directly use;

4. LED light source, low energy consumption, high life, high photosynthetic efficiency.

5. Flexible lamp body, during the installation process, the surface, the corner is not restricted.

6. This product USES the linear constant current control chip solution, pressure drop, convenient installation, 50 meters of the whole article can ensure the brightness is consistent；

7. Do not contain elements such as lead, mercury, green environmental protection；

8. Products through the CE, ROSH certification.

Accessories

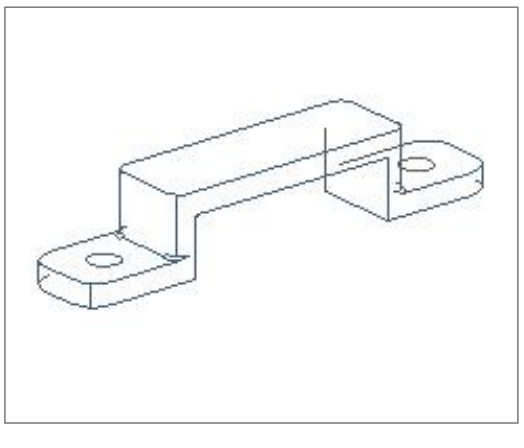

Silicone snap+Self-tapping screw

Aluminum profile

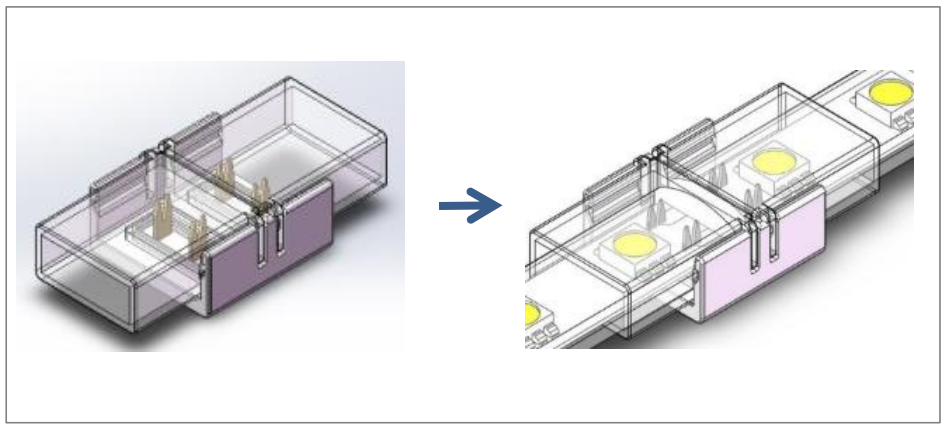

IP65 Mini puncture connecto（No wires）

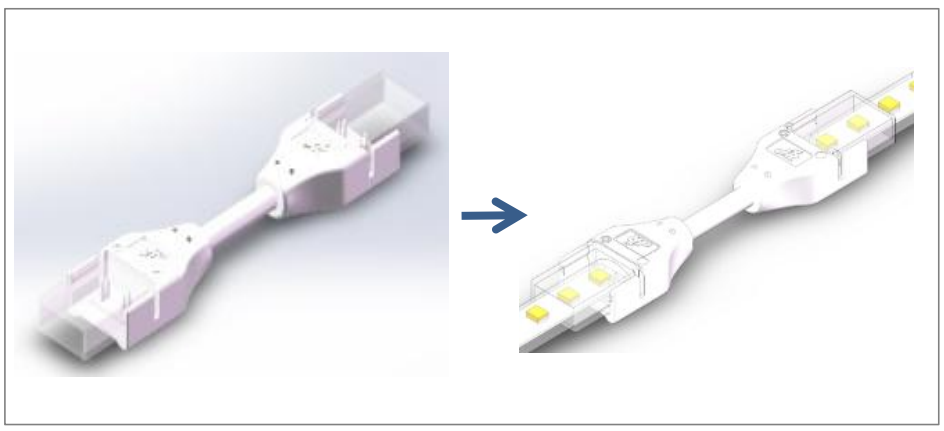

IP65 Mini puncture connecto（Center line out）/

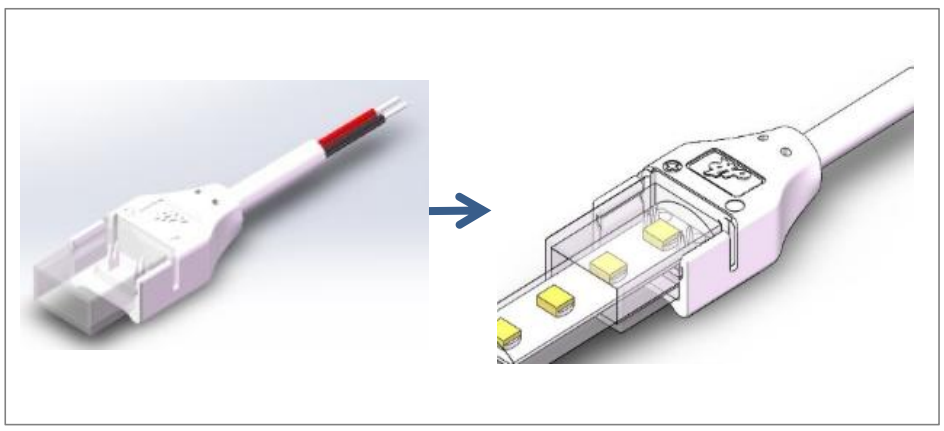

IP65 Mini puncture connecto（Single end exit）

Notes： ▸ **Please purchase the above accessories according to your demand.**

Snap Installation schematic

Packing instruction

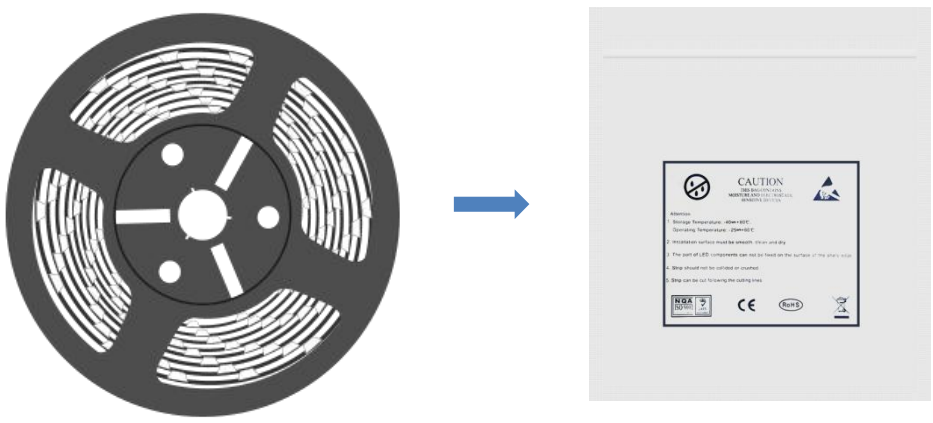

Notes

- The regular packing is 50m/roll, special length need to be customized.
- Do not place heavy products on the top of the cartons, do not step on it.
- After receiving the package, if the outer box was damaged, please check the goods before signing for receipt.